QUADRA-FIRE®

Tested and Listed by O-T-L Portland Oregon USA
C US
OMNI-Test Laboratories, Inc.

5700 STEP TOP WOOD STOVE SERIES
Advanced Combustion Control (ACC)

Owner's Manual
Installation and Operation

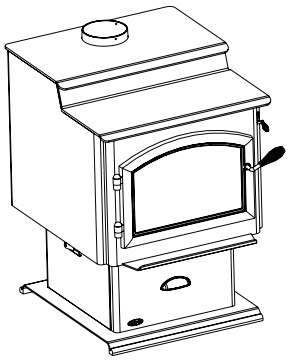

Pedestal Model

Model:

57ST-ACC

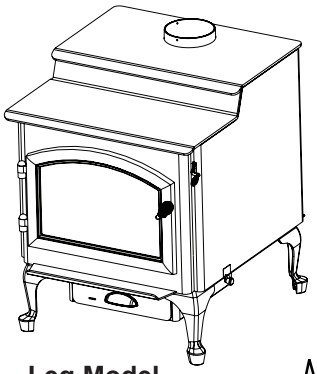

Leg Model

CAUTION

DO NOT DISCARD THIS MANUAL

DO NOT DISCARD

- Important operating and maintenance instructions included.
- Read, understand and follow these instructions for safe installation and operation.
- Leave this manual with party responsible for use and operation.

⚠ WARNING

If the information in these instructions is not followed exactly, a fire may result causing property damage, personal injury, or death.

- Do not store or use gasoline or other flammable vapors and liquids in the vicinity of this or any other appliance.
- Do not overfire - If heater or chimney connector glows, you are overfiring. Overfiring will void your warranty.
- Comply with all minimum clearances to combustibles as specified. Failure to comply may cause house fire.

⚠ WARNING

HOT SURFACES!

Glass and other surfaces are hot during operation AND cool down.

Hot glass will cause burns.

- Do not touch glass until it is cooled
- NEVER allow children to touch glass
- Keep children away
- CAREFULLY SUPERVISE children in same room as fireplace.
- Alert children and adults to hazards of high temperatures.

High temperatures may ignite clothing or other flammable materials.

- Keep clothing, furniture, draperies and other flammable materials away.

⚠ WARNING

Fire Risk.

For use with solid wood fuel only.
Other fuels may overfire and generate poisonous gases (i.e. carbon monoxide).

NATIONAL FIREPLACE INSTITUTE NFI CERTIFIED

Installation and service of this appliance should be performed by qualified personnel. Hearth & Home Technologies recommends NFI certified professionals, or technicians supervised by an NFI certified professional.

Wood Energy Technical Training www.wettinc.ca

Congratulations

and Welcome to the Quadra-Fire Family!

Hearth & Home Technologies welcomes you to our tradition of excellence! In choosing a Quadra-Fire appliance, you have our assurance of commitment to quality, durability, and performance.

This commitment begins with our research of the market, including 'Voice of the Customer' contacts, ensuring we make products that will satisfy your needs. Our Research and Development facility then employs the world's most advanced technology to achieve the optimum operation of our stoves, inserts and fireplaces. And yet we are old-fashioned when it comes to craftsmanship. Each unit is meticulously fabricated and gold and nickel surfaces are hand-finished for lasting beauty and enjoyment. Our pledge to quality is completed as each model undergoes a quality control inspection.

We wish you and your family many years of enjoyment in the warmth and comfort of your hearth appliance. Thank you for choosing Quadra-Fire.

NOTE: Clearances may only be reduced by means approved by the regulatory authority having jurisdiction

SAMPLE OF SERIAL NUMBER / SAFETY LABEL

LOCATION: Back of Appliance

Test Lab and Report Number | **Model Name** | **Serial Number**

CAUTION: ATTENTION: HOT WHILE IN OPERATION DO NOT TOUCH, KEEP CHILDREN AND CLOTHING AWAY. CONTACT MAY CAUSE SKIN BURNS. KEEP FURNISHINGS AND OTHER COMBUSTIBLE MATERIAL FAR AWAY FROM THE APPLIANCE. SEE NAMEPLATE AND INSTRUCTIONS
CHAUD LORS DE L'OPÉRATION. NE PAS TOUCHER. GARDEZ LES ENFANTS ET LES VÊTEMENTS LOIN DE L'ESPACE DÉSIGNÉ DE L'INSTALLATION. LE CONTACT PEUT CAUSER DES BRÛLURES À LA PEAU. GARDEZ LES MEUBLES ET LES MATÉRIAUX COMBUSTIBLES LOIN DE L'ESPACE DÉSIGNÉ DE L'APPAREIL. VOIR L'ÉTIQUETTE ET LES INSTRUCTIONS.

LISTED ROOM HEATER, SOLID FUEL TYPE.
ALSO FOR USE IN MOBILE HOMES. (UM)
84-HUD . **"For Use with Solid Wood Fuel Only"**

PREVENT HOUSE FIRES

Install and use only in accordance with manufacturer's installation and operating instructions. Contact local building or fire officials about restrictions and installation inspections in your area. Do not obstruct the space beneath heater.
WARNING - For Mobile Homes: Do not install in a sleeping room. An outside combustion air inlet must be provided and unrestricted while unit is in use. The structural integrity of the mobile home floor, ceiling and walls must be maintained. The stove needs to be properly grounded to the frame of the mobile home. Components required for mobile home installation: Outside Air Kit, Part Number 831-1780.
Refer to manufacturer's instructions and local codes for precautions required for passing chimney through a combustible wall or ceiling and maximum offsets.
Inspect and clean chimney frequently - Under Certain Conditions of Use, Creosote Buildup May Occur Rapidly.
Do not connect this unit to a chimney serving another appliance.
Optional Components: Optional Blower, Part 831-1701.
Electrical Rating: 115 VAC, 1.2 Amps, 60 Hz.
Route power cord away from unit. Do not route cord over or in front of appliance.
DANGER: Risk of electrical shock. Disconnect power supply before servicing.
Replace glass only with 5mm ceramic available from your dealer.
Do not use grate or elevate fire. Build wood fire directly on hearth.
Do not overfire - if heater or chimney connector glows, you are overfiring.

APPAREIL DE CHAUFFAGE DE PIÈCE, DE TYPE DE COMBUSTIBLE SOLIDE, POUR USAGE DANS LES MAISONS MOBILES. (UM) 84 HUD. "Pour Usage Avec Bois Solide Seulement"

PRÉVENTION DES FEUX DE MAISON

Installez et utilisez en accord avec les instructions d'installation et d'opération du fabricant. Contactez le bureau de la construction ou le bureau des incendies au sujet des restrictions et des inspections d'installation dans votre voisinage. Ne pas obstruez l'espace en dessous de l'appareil.
AVIS - Pour Les Maisons Mobiles: Ne pas installer dans une chambre à coucher. Un tuyau extérieur de combustion d'air doit être installé et ne doit pas être obstrué lorsque l'appareil est en usage. La structure intégrale du plancher, du plafond et des murs de la maison mobile doit être maintenue intacte. L'appareil de chauffage doit être fixé à la charpente de la maison mobile. Les composants requis pour l'installation des maisons mobiles: Assemblage d'air extérieur, Numéro de Pièce 831-1780.
Référez vous aux instructions du fabricant et des codes locaux pour les précautions requises pour passer une cheminée à travers un mur ou un plafond combustibles, et les compensations maximums.
Inspectez et nettoyez la cheminée fréquemment. Sous certaines conditions, il se peut que la créosote s'accumule rapidement.
Ne pas connecter cet appareil à une cheminée servant un autre appareil.
Composants Optionnels: Ventilateur Optionnel, Pièce #831-1701.
Puissance Électrique: 115 VAC, 1.2 Amps, 60 Hz.
Éloignez le fil électrique de l'appareil. Ne pas faire passer le fil électrique au dessus ou en dessous de l'appareil.
DANGER: Il y a risque de décharge électrique. Déconnectez le fil électrique de la prise de contact avant le service.
Remplacez la vitre seulement avec une vitre céramique de 5 mm disponible chez votre fournisseur.
N'élevez pas le feu. Bâtissez le feu directement sur l'âtre.
Ne pas surchauffer l'appareil de chauffage ou le tuyau

Tested and Listed by OMNI-Test Laboratories, Inc. Portland Oregon USA
Report / Rapport #061-S-73-6.2

QUADRA-FIRE

TESTED TO:/ TESTÉ À:
UL 1482, ULC S627-00

5700 Step Top ACC

SERIAL NO. / NUMÉRO DE SÉRIE
007007

VENT SPECIFICATIONS:

SINGLE WALL: Six inch (6 inches) (152mm) diameter, minimum 24 MSG black or blued steel connector pipe, with a listed factory-built UL103HT* Class "A" chimney, suitable for use with solid fuels, or a masonry chimney, and the referenced clearances.
DOUBLE WALL: Six inch (6 inches) (152mm) diameter, listed double wall air insulated connector pipe with listed factory-built UL103HT* Class "A" chimney, or a masonry chimney and the referenced clearances.
MOBILE HOME: Use single wall pipe by Dura-Vent DVL, Selkirk Metalbestos DS or Security DL double wall connector pipe. Must be equipped with a spark arrestor. Apply wall clearances below when installing unit.

MIN CLEARANCES TO COMBUSTIBLE MATERIALS: Inches & (Millimeters)
NOTE: Toutes les "A", "C", et "F" Dimensions are to inside diameter of flue collar.

SPÉCIFICATIONS DE LA VENTILATION:

MUR SIMPLE: De six (6 inches) (152mm) de diamètre le connecteur de conduit de minimum d'acier noir ou bleu de minimum de 24MSG, avec une cheminée bâtit en usine UL103HT* de Classe "A", adéquate pour usage avec les combustions solides, ou une cheminée de briques, avec espaces libres référés.
MUR DOUBLE: De six (6 inches) (152mm) de diamètre, le connecteur du conduit d'air isolé pour mur double avec une cheminée bâtit en usine UL103HT* de Classe "A:, ou une cheminée de briques, avec espaces libres alloués.
MAISON MOBILE: Utiliser un conduit de mur double par Dura-Vent DVL, Selkirk Metalbestos DS ou Security DL. Doit être équipé d'un arrêt d'étincelle. Utiliser les espaces libres pour mur double comme mentionné ci-bas.

ESPACES LIBRES MIN DES MATÉRIAUX COMBUSTIBLES: En Pouces & (millimètres)
NOTE: Toutes les dimensions "A", "C", et "F" sont à partir du diamètre intérieur de l'entrée du conduit.

INSTALLATION: VERTICAL / INSTALLATION: ENTIÈREMENT VERTICALE

	A	B	C	D	E	F	G	H	
SINGLE WALL PIPE	12.5 (318)	10.5 (267)	25.5 (648)	15 (381)	2 (51)	12 (305)	45 (1143)	N/A	CONDUIT DU MUR SIMPLE
DOUBLE WALL PIPE	9.5 (241)	7.5 (191)	25.5 (648)	15 (381)	2 (51)	12 (305)	45 (1143)	N/A	CONDUIT DU MUR DOUBLE

INSTALLATION: HORIZONTAL WITH MINIMUM 2 FT VERTICAL OFF STOVE TOP
INSTALLATION: HORIZONTALE AVEC 609mm VERTICAL MINIMUM DU HAUT DU POÊLE

SINGLE WALL PIPE	9.5 (241)	7.5 (191)	25.5 (648)	15 (381)	**	**	45 (1143)	18 (457)**	CONDUIT DU MUR SIMPLE

BACKWALL/SIDE WALL MUR ARRIÈRE/MUR DE CÔTÉ

CORNER INSTALLATION INSTALLATION DU COIN

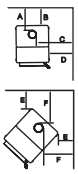

SAMPLE

Manufactured by:
Fabriqué par:
HEARTH & HOME technologies
1445 N. Highway, Colville, WA 99114
www.quadrafire.com

2009 2010 2011 Jan. Feb. Mar. Apr. May June July Aug. Sept. Oct. Nov. Dec.

DO NOT REMOVE THIS LABEL / NE PAS ENLEVER L'ÉTIQUETTE

Made in U.S.A./Fait Aux États-Unis

U.S. ENVIRONMENTAL PROTECTION AGENCY - Certified to comply with July 1990 particulate emission standards.

7038-162

Manufacturer Date

Safety Alert Key:

- ***DANGER!*** Indicates a hazardous situation which, if not avoided will result in death or serious injury.
- ***WARNING!*** Indicates a hazardous situation which, if not avoided may result in death or serious injury.
- ***CAUTION!*** Indicates a hazardous situation which, if not avoided, may result in minor or moderate injury.
- ***NOTICE:*** Indicates practices which may cause damage to the appliance or to property.

TABLE OF CONTENTS

Congratulations 2
Sample of Safety/Serial Number Label 2
Warranty Policy 4-5

Section 1: Listing and Code Approvals
A. Appliance Certifications....6
B. Mobile Home Approved....6
C. Glass Specifications....6
D. BTU & Efficiency Specifications....6

User's Guide

Section 2: Operating Instructions
A. General Operating Parts 7
B. Fire Safety....8
C. Overfiring....8
D. Combustible/Non-combustible Material 8
E. Seasoned Wood....8
F. Chimney Fire....8
G. Burning Process....9
H. Automatic Combustion Control (ACC) 10
I. Air Controls 10
J. Burn Rates and Operating Efficiency....11
K. Correct Baffle & Blanket Placement....12
L. Building a Fire 13
M. Wood Fuel....14
N. Blower Operating Instructions....15
O. Clear Space 15
P. Opacity (Smoke) 16
Q. Frequently Asked Questions....16

Section 3: Maintenance and Service
A. Ash Removal System Operating & Cleaning 17
B. Disposal of Ashes 17
C. Chimney & Chimney Connector Inspection/Cleaning....18
D. Appliance Inspection - Routine 18
E. Glass Cleaning....18
F. Firebrick Inspection....19
G. Plated Surfaces Cleaning....19
H. Quick Reference Maintenance Guide 20

Section 4: Troubleshooting Guide....21

Section 5: Service Parts Replacement
A. Glass Replacement....22
B. Snap Disc Replacement....22
C. Baffle Removal....23
D. Door Handle Assembly 24
E. Tube Channel Assembly Replacement....25

Installer's Guide

Section 6: Getting Started
A. Design, Installation & Location Considerations 26
B. Draft 26
C. Negative Pressure....26
D. Locating Your Appliance and Chimney....27
E. Chimney Termination Requirements....26
F. 2-10-3 Rule 28
G. Tools and Supplies Needed....29
H. Fire Safety....29
I. Inspect Appliance and Components and Pre-Use Checklist 29

Section 7: Dimensions and Clearances
A. Appliance Dimensions....30
B. Clearances to Combustibles (UL and ULC) 31
C. Hearth Protection Requirements....32
D. Alternate Floor Protection 33

Section 8: Venting and Chimney Systems
A. Venting Systems 34
B. Chimney Systems 34
C. Chimney Height/Rise and Run....34
D. Factory-Built Chimney....35
E. Masonry Chimney 36
F. Masonry Chimney Liner 37
G. Air Clearances....38
H. Thimble 38-39

Section 9: Appliance Set-up
A. Outside Air Installation 40
B. Pedestall Assembly and Ash Removal System Installation....41-42
C. Leg Kit and Ash Removal System Installation ..43
D. Mobile Home Installation....44
E. Blower Installation (Optional) 45
F. Adjusting the Blower Speed Control 45

Section 10: Reference Materials
A. Exploded Drawings 46
B. Service Parts & Accessories....47-49
C. Service & Maintenance Log 50-51
D. Contact Information....52

Warranty Policy

Hearth & Home Technologies Inc.
LIMITED LIFETIME WARRANTY

Hearth & Home Technologies Inc., on behalf of its hearth brands (”HHT”), extends the following warranty for HHT gas, wood, pellet, coal and electric hearth appliances that are purchased from an HHT authorized dealer.

WARRANTY COVERAGE:

HHT warrants to the original owner of the HHT appliance at the site of installation, and to any transferee taking ownership of the appliance at the site of installation within two years following the date of original purchase, that the HHT appliance will be free from defects in materials and workmanship at the time of manufacture. After installation, if covered components manufactured by HHT are found to be defective in materials or workmanship during the applicable warranty period, HHT will, at its option, repair or replace the covered components. HHT, at its own discretion, may fully discharge all of its obligations under such warranties by replacing the product itself or refunding the verified purchase price of the product itself. The maximum amount recoverable under this warranty is limited to the purchase price of the product. This warranty is subject to conditions, exclusions and limitations as described below.

WARRANTY PERIOD:

Warranty coverage begins on the date of installation. In the case of new home construction, warranty coverage begins on the date of first occupancy of the dwelling or six months after the sale of the product by an independent, authorized HHT dealer/ distributor, whichever occurs earlier. The warranty shall commence no later than 24 months following the date of product shipment from HHT, regardless of the installation or occupancy date. The warranty period for parts and labor for covered components is produced in the following table.

The term “Limited Lifetime” in the table below is defined as: 20 years from the beginning date of warranty coverage for gas appliances, and 10 years from the beginning date of warranty coverage for wood, pellet, and coal appliances. These time periods reflect the minimum expected useful lives of the designated components under normal operating conditions.

Warranty Period		HHT Manufactured Appliances and Venting							Components Covered
Parts	Labor	Gas	Wood	Pellet	EPA Wood	Coal	Electric	Venting	
1 Year		X	X	X	X	X	X	X	All parts and material except as covered by Conditions, Exclusions, and Limitations listed
2 years				X	X	X			Igniters, electronic components, and glass
		X	X	X	X	X			Factory-installed blowers
			X						Molded refractory panels
3 years				X					Firepots and burnpots
5 years	1 year			X	X				Castings and baffles
7 years	3 years		X	X	X				Manifold tubes, HHT chimney and termination
10 years	1 year	X							Burners, logs and refractory
Limited Lifetime	3 years	X	X	X	X	X			Firebox and heat exchanger
90 Days		X	X	X	X	X	X	X	All replacement parts beyond warranty period

See conditions, exclusions, and limitations on next page.

4021-645B 04-02-09

WARRANTY CONDITIONS:

- This warranty only covers HHT appliances that are purchased through an HHT authorized dealer or distributor. A list of HHT authorized dealers is available on the HHT branded websites.
- This warranty is only valid while the HHT appliance remains at the site of original installation.
- Contact your installing dealer for warranty service. If the installing dealer is unable to provide necessary parts, contact the nearest HHT authorized dealer or supplier. Additional service fees may apply if you are seeking warranty service from a dealer other than the dealer from whom you originally purchased the product.
- Check with your dealer in advance for any costs to you when arranging a warranty call. Travel and shipping charges for parts are not covered by this warranty.

WARRANTY EXCLUSIONS:

This warranty does not cover the following:

- Changes in surface finishes as a result of normal use. As a heating appliance, some changes in color of interior and exterior surface finishes may occur. This is not a flaw and is not covered under warranty.
- Damage to printed, plated, or enameled surfaces caused by fingerprints, accidents, misuse, scratches, melted items, or other external sources and residues left on the plated surfaces from the use of abrasive cleaners or polishes.
- Repair or replacement of parts that are subject to normal wear and tear during the warranty period. These parts include: paint, wood, pellet and coal gaskets; firebricks; grates; flame guides; and the discoloration of glass.
- Minor expansion, contraction, or movement of certain parts causing noise. These conditions are normal and complaints related to this noise are not covered by this warranty.
- Damages resulting from: (1) failure to install, operate, or maintain the appliance in accordance with the installation instructions, operating instructions, and listing agent identification label furnished with the appliance; (2) failure to install the appliance in accordance with local building codes; (3) shipping or improper handling; (4) improper operation, abuse, misuse, continued operation with damaged, corroded or failed components, accident, or improperly/incorrectly performed repairs; (5) environmental conditions, inadequate ventilation, negative pressure, or drafting caused by tightly sealed constructions, insufficient make-up air supply, or handling devices such as exhaust fans or forced air furnaces or other such causes; (6) use of fuels other than those specified in the operating instructions; (7) installation or use of components not supplied with the appliance or any other components not expressly authorized and approved by HHT; (8) modification of the appliance not expressly authorized and approved by HHT in writing; and/or (9) interruptions or fluctuations of electrical power supply to the appliance.
- Non-HHT venting components, hearth components or other accessories used in conjunction with the appliance.
- Any part of a pre-existing fireplace system in which an insert or a decorative gas appliance is installed.
- HHT's obligation under this warranty does not extend to the appliance's capability to heat the desired space. Information is provided to assist the consumer and the dealer in selecting the proper appliance for the application. Consideration must be given to appliance location and configuration, environmental conditions, insulation and air tightness of the structure.

This warranty is void if:

- The appliance has been over-fired or operated in atmospheres contaminated by chlorine, fluorine, or other damaging chemicals. Over-firing can be identified by, but not limited to, warped plates or tubes, rust colored cast iron, bubbling, cracking and discoloration of steel or enamel finishes.
- The appliance is subjected to prolonged periods of dampness or condensation.
- There is any damage to the appliance or other components due to water or weather damage which is the result of, but not limited to, improper chimney or venting installation.

LIMITATIONS OF LIABILITY:

- The owner's exclusive remedy and HHT's sole obligation under this warranty, under any other warranty, express or implied, or in contract, tort or otherwise, shall be limited to replacement, repair, or refund, as specified above. In no event will HHT be liable for any incidental or consequential damages caused by defects in the appliance. Some states do not allow exclusions or limitation of incidental or consequential damages, so these limitations may not apply to you. This warranty gives you specific rights; you may also have other rights, which vary from state to state. EXCEPT TO THE EXTENT PROVIDED BY LAW, HHT MAKES NO EXPRESS WARRANTIES OTHER THAN THE WARRANTY SPECIFIED HEREIN. THE DURATION OF ANY IMPLIED WARRANTY IS LIMITED TO DURATION OF THE EXPRESSED WARRANTY SPECIFIED ABOVE.

4021-645B 04-02-09

1 Listing and Code Approvals

A. Appliance Certification

Model:	5700 Step Top (ACC) Uni-Body
Laboratory:	OMNI Test Laboratories, Inc.
Report Number:	061-S-73-6.2
Type:	Listed Room Heater, Solid Fuel Type
Standard:	UL1482 and ULC S627-00 and (UM) 84-HUD, Mobile Home Approved.

NOTICE: This installation must conform with local codes. In the absence of local codes you must comply with the **UL1482, (UM) 84-HUD and NPFA211** in the U.S.A. and the **ULC S627-00 and CAN/CSA-B365 Installation Codes** in Canada.

The Quadra-Fire 5700 Wood Stove (ACC) meets the U.S. Environmental Protection Agency's 1990 particulate emission standards.

B. Mobile Home Approved

- This appliance is approved for mobile home installations when not installed in a sleeping room and when an outside combustion air inlet is provided.
- The structural integrity of the mobile home floor, ceiling, and walls must be maintained.
- The appliance must be properly grounded to the frame of the mobile home with #8 copper ground wire, and use only listed double-wall connector pipe.
- Outside Air Kit, part OAK-ACC must be installed in a mobile home installation.

C. Glass Specifications

This stove is equipped with 5mm ceramic glass. Replace glass only with 5mm ceramic glass. Please contact your dealer for replacement glass.

D. BTU & Efficiency Specifications

EPA Certified:	2.3 grams per hour
Efficiency:	86%
BTU Output:	11,100 to 40,400 / hr.
Heating Capacity:	2,250 - 3,175 sq ft depending on climate zone
Vent Size:	6 inches
Firebox Size:	3.0 cubic feet
Max Wood Length:	24 inches
Fuel:	Cord Wood
Shipping Weight:	484 lbs

WARNING! Risk of Fire! *Hearth & Home Technologies disclaims any responsibility for, and the warranty and agency listing will be voided by the above actions.*

DO NOT:

- *Install or operate damaged appliance*
- *Modify appliance*
- *Install other than as instructed by Hearth & Home Technologies*
- *Operate the appliance without fully assembling all components*
- *Overfire*
- *Install any component not approved by Hearth & Home Technologies*
- *Install parts or components not Listed or approved*

Improper installation, adjustment, alteration, service or maintenance can cause injury or property damage.

For assistance or additional information, consult a qualified installer, service agency or your dealer.

NOTE: Hearth & Home Technologies, manufacturer of this appliance, reserves the right to alter its products, their specifications and/or price without notice.

Quadra-Fire is a registered trademark of Hearth & Home Technologies.

User Guide

2 Operating Instructions

⚠ WARNING

HOT SURFACES!

Glass and other surfaces are hot during operation AND cool down.

Hot glass will cause burns.

- **DO NOT** touch glass until it is cooled
- NEVER allow children to touch glass
- Keep children away
- CAREFULLY SUPERVISE children in same room as appliance.
- Alert children and adults to hazards of high temperatures.

High temperatures may ignite clothing or other flammable materials.

- Keep clothing, furniture, draperies and other flammable materials away.

NOTICE: If you expect that children may come into contact with this appliance, we recommend a barrier such as a decorative screen. See your dealer for suggestions.

A. Your Wood Appliance - General Operating Parts

WARNING! DO NOT operate appliance before reading and understanding operating instructions.
Failure to operate appliance according to operating instructions could cause fire or injury.

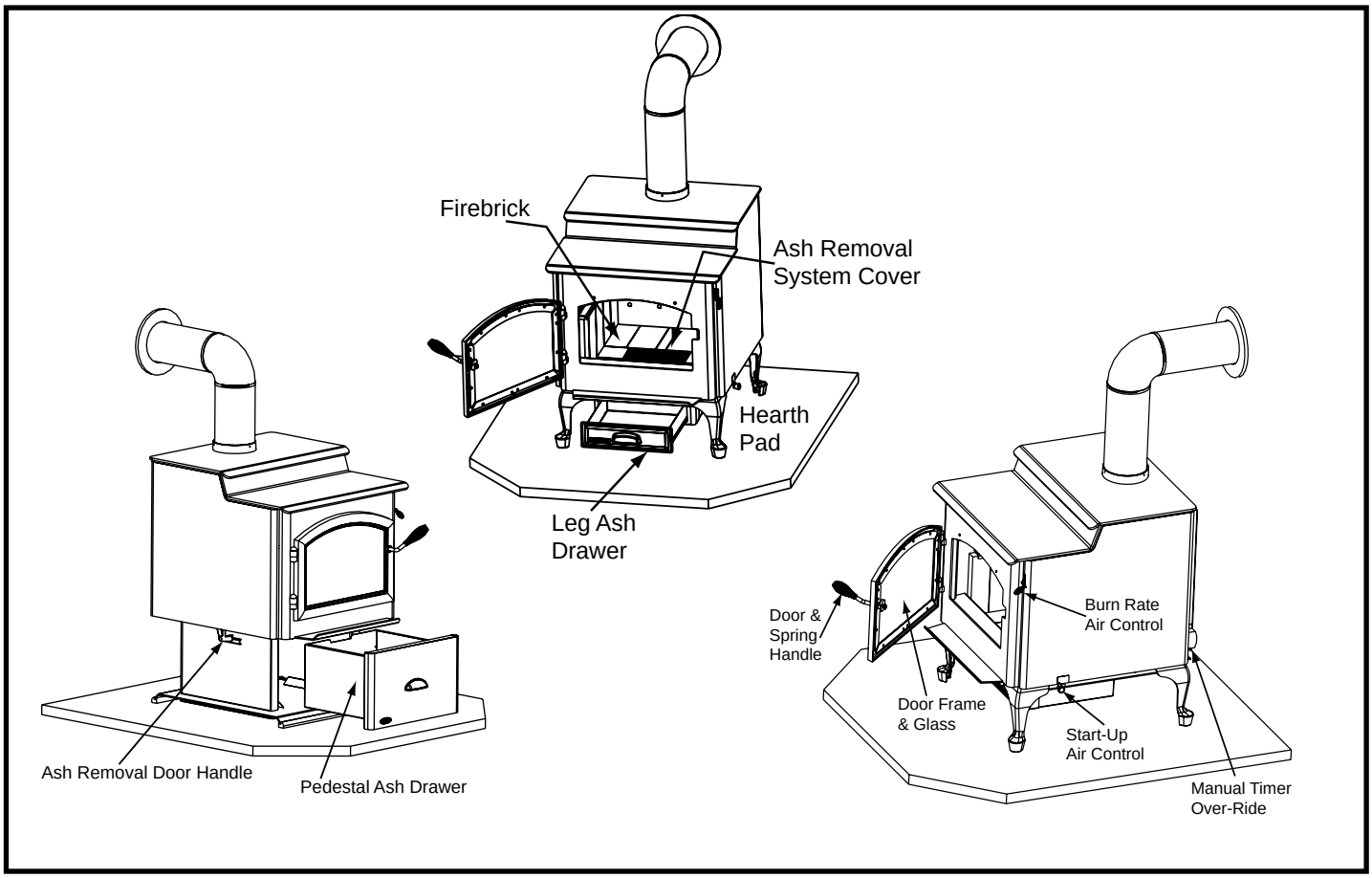

Figure 6.1 General Operating Parts

B. Fire Safety

To provide reasonable fire safety, the following should be given serious consideration:

1. Install at least one smoke detector on each floor of your home to ensure your safety. They should be located away from the heating appliance and close to the sleeping areas. Follow the smoke detector manufacturer's placement and installation instructions, and be sure to maintain regularly.
2. A conveniently located Class A fire extinguisher.
3. A practiced evacuation plan, consisting of at least two escape routes.
4. In the event of a chimney fire:
   a. Prepare occupants for immediate evacuation
   b. Notify fire department

C. Overfiring

WARNING! Risk of Fire!

Do not over-fire.
Over-firing may ignite creosote or will damage the stove and chimney.
To prevent over-firing your stove, DO NOT:
- *Use flammable liquids*
- *Overload with wood*
- *Burn trash or large amounts of scrap lumber*
- *Permit too much air to the fire*

1. Symptoms of Over-Firing

Symptoms of over-firing may include one or more of the following:

- Chimney connector or appliance glowing
- Roaring, rumbling noises
- Loud cracking or banging sounds
- Metal warping
- Chimney fire

2. What To Do if Your Stove is Over-Firing

- Immediately close the door and air controls to reduce air supply to the fire.
- If you suspect a chimney fire, call the fire department and evacuate your house.
- Contact your local chimney professional and have your stove and stove pipe inspected for any damage.
- Do not use your stove until the chimney professional informs you it is safe to do so.

Hearth & Home Technologies **WILL NOT** warranty stoves that exhibit evidence of over-firing. Evidence of over-firing includes, but is not limited to:

- Warped air tube
- Deteriorated refractory brick retainers
- Deteriorated baffle and other interior components

D. Combustible/Non-combustible Materials

- **Combustible Material**

  Material made of or surfaced with wood, compressed paper, plant fibers, plastics, or any material capable of igniting and burning, whether flame-proofed or not, plastered or unplastered.

- **Non-combustible Material**

  Material which will not ignite and burn. Such materials are those consisting entirely of steel, iron, brick, tile, slate, glass or plasters, or any combination thereof.

- **Non-combustible Sealant Material**

  Sealants which will not ignite and burn: Rutland, Inc. Fireplace Mortar #63, Rutland 76R, Nuflex 304, GE RTV106 or GE RTB116 (or equivalent).

E. Seasoned Wood

Burn only dry seasoned wood.

- Store wood under cover, out of the rain and snow.
- Dry and well-seasoned wood will not only minimize the chance of creosote formation, but will give you the most efficient fire.
- Even dry wood contains at least 15% moisture by weight, and should be burned hot enough to keep the chimney hot for as long as it takes to dry the wood out - about one hour.
- It is a waste of energy to burn unseasoned wood of any kind.

Dead wood lying on the forest floor should be considered wet, and requires full seasoning time.

- Standing dead wood can be considered to be about 2/3 seasoned.
- To tell if wood is dry enough to burn, check the ends of the logs.
- If there are cracks radiating in all directions from the center, it is dry.
- If your wood sizzles in the fire, even though the surface is dry, it may not be fully cured.

F. Chimney Fire

WARNING! Risk of Fire! *A chimney fire can permanently damage your chimney system and nearby structures.*

In the event of a chimney fire, Hearth & Home Technologies Inc. recommends

- Replacement of the chimney, and
- Inspection of the adjacent structure to the provisions of NFPA Level III inspection criteria

G. Burning Process

In recent years there has been an increasing concern about air quality. Much of the blame for poor air quality has been placed on the burning of wood for home heating.

In order to improve the situation, we at Quadra-Fire have developed cleaner-burning wood appliances that surpass the requirements for emissions established by our governing agencies.

These wood appliances must be properly operated in order to ensure that they perform the way they are designed to perform.

> ***NOTICE:*** *Improper operation can turn any wood appliance into a smoldering environmental hazard.*

1. Kindling or First Stage

It helps to know a little about the actual process of burning in order to understand what goes on inside the appliance. The first stage of burning is called the kindling stage.

In this stage:

- Wood is heated to a temperature high enough to evaporate the moisture present in all wood.
- Wood will reach the boiling point of water (212°F) and will not get any hotter until the water is evaporated.

This process takes heat from the coals and tends to cool the appliance.

Fire requires three things to burn:

- Fuel
- Air
- Heat

If heat is robbed from the appliance during the drying stage, the new load of wood has reduced the chances for a good clean burn.

It is always best to burn dry, seasoned firewood. When the wood isn't dry, you must open the air controls and burn at a high burn setting for a longer time to start it burning.

The heat generated from the fire should be warming your home and establishing the flue draft, not evaporating the moisture out of wet, unseasoned wood, resulting in wasted heat.

2. Second Stage

In the secondary stage wood gives off flammable gases which burn above the fuel with bright flames.

During this stage of burning:

- The flames must be maintained and not allowed to go out to ensure the cleanest possible fire.
- If the flames tend to go out, it is set too low for your burning conditions.

The air control located at the upper right hand corner is used to adjust for burn rates. This is called the Burn Rate Air Control. **Figure 10.1 on page 10.**

3. Final Stage

The final stage of burning is the charcoal stage. This occurs when the flammable gases have been mostly burned and only charcoal remains. This is a naturally clean portion of the burn. The coals burn with hot blue flames.

- It is very important to reload your appliance while enough lively hot coals remain in order to provide the amount of heat needed to dry and rekindle the next load of wood.
- It is best to open the Burn Rate Air and Start-Up Air Controls ***before reloading***. This livens up the coalbed and reduces excessive emissions (opacity/smoke). **Figure 10.1 on page 10.**
- Open door slowly so that ash or smoke does not exit appliance through opening.
- Break up any large chunks and distribute the coals so that the new wood is laid on hot coals.

Air quality is important to all of us, and if we choose to use wood to heat our homes we should do so responsibly.

We need to learn to burn in the cleanest way possible allowing us to continue using our wood appliances for many years to come.

H. Automatic Combustion Control (ACC)

Typically, when you build a fire, you open the air controls fully and monitor the fire to prevent it from going into an overfire situation and/or burning your wood up too quickly before you shut down the air controls to the desired burn rate.

When using the Automatic Combustion Control (ACC) system, you do not have to continually monitor the fire. Once you set the ACC system it will control the fire for you. Follow the instructions below to learn how to operate your stove with ease.

I. Air Controls

1. Start-Up Air Control

The Start-Up Air Control has two primary functions.

The first function is to activate the Automatic Combustion Control system (ACC).

- Slide the Start-Up Air Control all the way back until it stops at the "HI" indicator on the label and then pull forward to the front of the appliance until it stops. **Figure 10.1.**
- The front air channel opens and allows air to enter the front of the appliance for approximately 25 minutes.
- The front air channel gradually shuts down until it is completely closed at the end of the 25 minutes.
- The fire is now controlled by the air supplied by the Burn Rate Air Control. **Figure 10.1.**
- This function should be performed each time you reload the appliance.

The second function of the Start-Up Air Control is operation of the rear air system.

- Slide the Start-Up Air Control between the first and third marker as indicated on the label to allow rear air to enter the firebox. **Figure 10.1.**
- The rear air is used primarily during a High Burn Rate.
- In some instances rear air is desired during normal operation to help with combustion of fuel towards the back of the firebox particularly when burning hardwoods.
- The rear air is controlled independently from the ACC system.

2. Manual Timer Over-Ride

If you need to shut the ACC system off before it shuts itself off after 25 minutes (i.e. overfire situation), reach down to the bottom right rear corner and pull the lever toward you. **Figure 10.2.**

3. Burn Rate Air Control

- The air supply enters at the upper front of the firebox, near the top of the glass door.
- This preheated air supplies the necessary fresh oxygen to mix with the unburned gases, helping to create second, third and fourth combustions

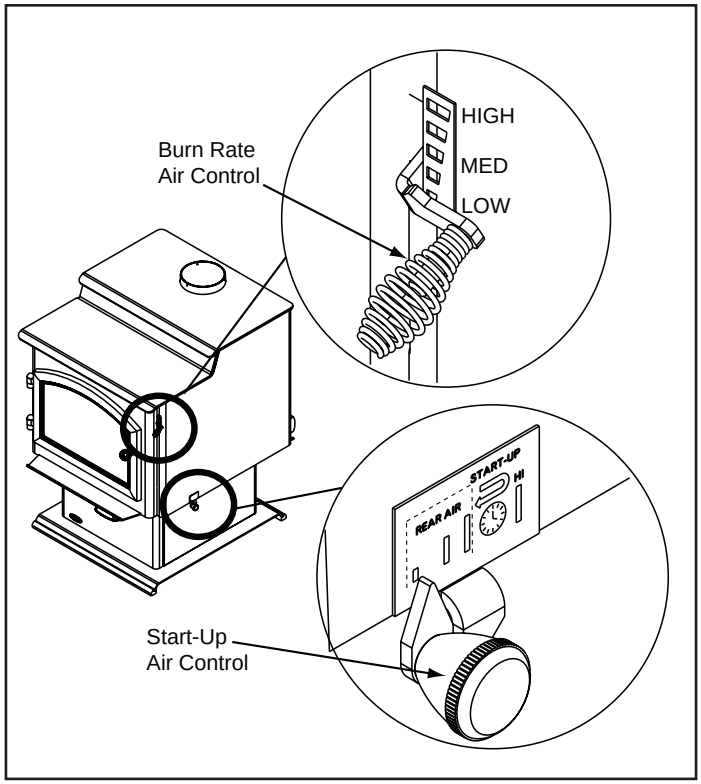

Figure 10.1 - Start-Up and Burn Rate Air Controls

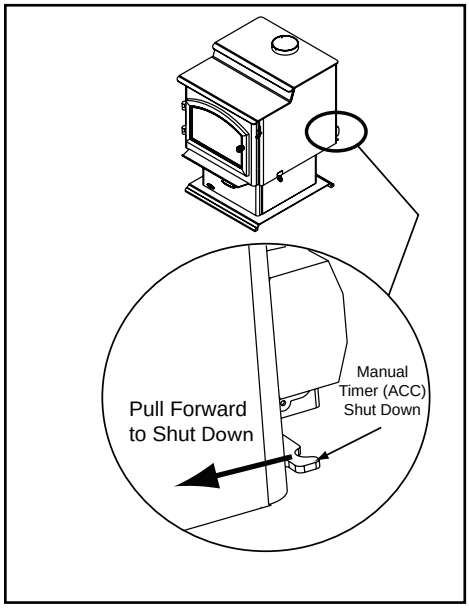

Figure 10.2 - Manual Over-Ride

3. Burn Rate Air Control (Cont'd)

- This air is regulated by the Burn Rate Air Control.
- There are four settings High, Medium-High, Medium-Low and Low.
- When the control is raised all the way up it is on the High setting and when pushed all the down it is on the Low setting. **Figure 11.1** on page **11.**

J. Burn Rates and Operating Efficiency

For maximum operating efficiency

1. This appliance has a timer system (ACC) that operates the appliance at its maximum efficiency removing any guess work for the homeowner. Follow the instructions below for each burn rate for the Start-Up Air Control and Burn Rate Air Control. **Figure 11.1.**
2. Burn dry, well-seasoned wood.

Burn Rates

1. Starting a Fire

- Open both controls fully by raising the Burn Rate Air Control all the way up until it stops and slide the Start-up Air Control back until it stops.
- The blower tends to cool the appliance. Leave the blower off until the burn is well established, i.e., 30 minutes.
- After loading the appliance with wood and starting the fire, set both controls to the desired setting by following the burn rate instructions below.

2. High Burn Rate - Maximum Heat* - 30,000+ BTU/hr

- Raise the Burn Rate Air Control all the way up until it stops (top marker) to a fully open position.
- Slide the Start-Up Air Control all the way back until it stops (HI marker) and leave it there.
- This setting over-rides the timer system (ACC) so you must monitor the fire closely while in this setting to avoid overfiring your stove.

3. Medium-High Burn Rate* - 15,000 to 30,000 BTU/hr

- Raise the Burn Rate Air Control all the way up until it stops (top marker) to a fully open position. Blower may remain on.
- Slide the Start-Up Air Control all the way back until it stops (HI marker) and then pull forward until it stops.
- This activates the timer system (ACC).

4. Medium-Low Burn Rate* - 10,000 to 15,000 BTU/hr

- Raise the Burn Rate Air Control up to the bottom of the middle marker and stop. Leave the blower off until the burn is well established, i.e., 30 minutes.
- Slide the Start-Up Air Control all the way back until it stops (HI marker) and then pull forward until it stops.
- This activates the timer system (ACC).

WARNING! Risk of Fire!

When set on High Burn Rate and over-riding the Automatic Combustion Control system an overfire situation can occur and may result in a chimney fire.

Overfiring will void the stove warranty.

5. Low Burn Rate* - Below 10,000 BTU/hr

- Leave the Burn Rate Air Control at the bottom marker. Leave the blower off until the burn is well established, i.e., 30 minutes.
- Slide the Start-Up Air Control all the way back until it stops (HI marker) and then pull forward until it stops.

***NOTE:** These are approximate settings, and will vary with type of wood or chimney draft. Due to altitude and other environmental circumstances, this operational information is a guideline only.

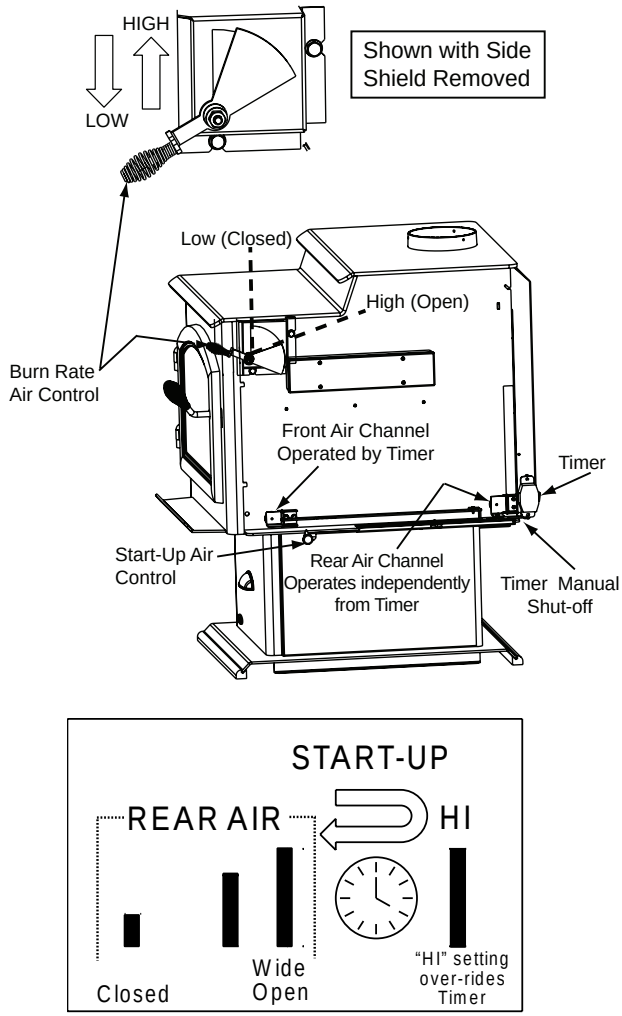

After activating the timer (ACC), if the control is placed within the rear air section on the label it will allow rear air to enter the firebox. This will not interfere with the timer gradually closing the front air channel in 25 minutes. If control is set on "HI" it over-rides the timer (ACC).

Figure 11.1

K. Correct Baffle & Blanket Placement

WARNING! Risk of Fire!

Firebox damage due to improper baffle placement is not covered by warranty. Operate the wood burning appliance with the baffle in the correct position only.

Not doing so could result in:

- *Reduced efficiency*
- *Overheating the chimney*
- *Overheating the rear of the firebox*
- *Poor performance*

Ensure correct baffle placement and replace baffle components if damaged or missing.

CORRECT POSITION

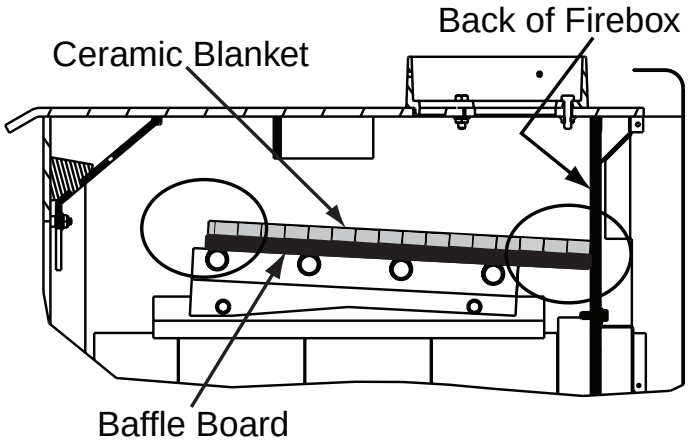

Ceramic Blanket and Baffle Board MUST be in contact with the back of the firebox and even with each other in the front.

Figure 12.1

INCORRECT POSITIONS

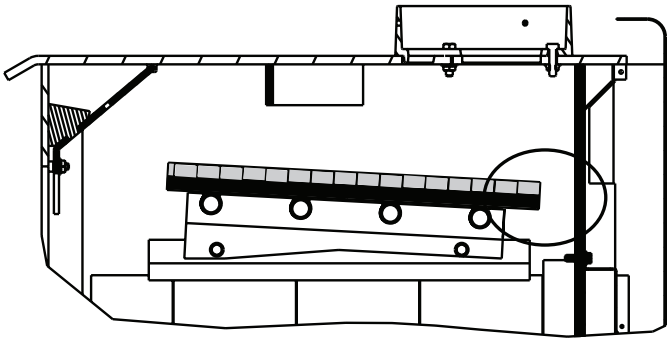

Ceramic Blanket and Baffle Board are NOT in contact with the back of the firebox.

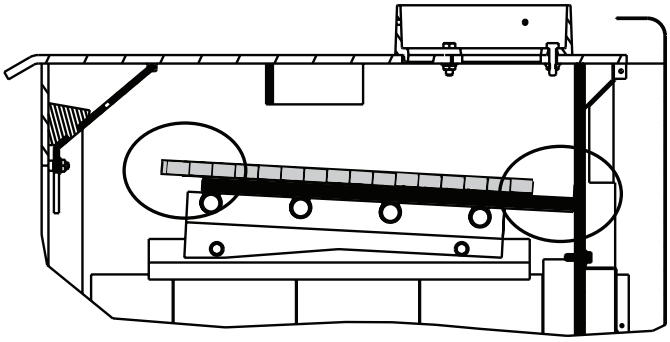

Ceramic Blanket is NOT in contact with the back of the firebox and NOT even with the Baffle Board in the front.

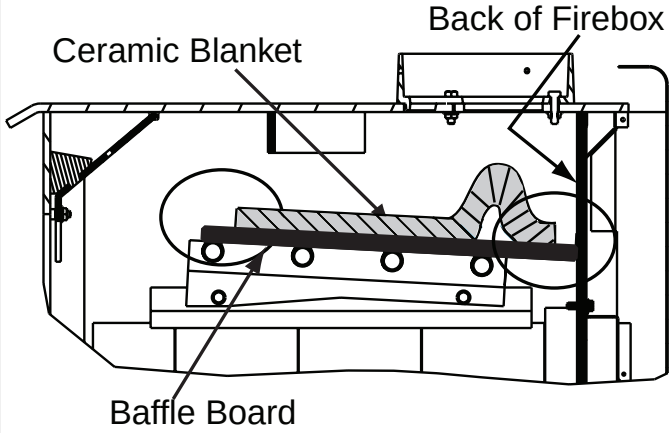

Ceramic Blanket is bunched up at the back of the firebox and NOT even with the Baffle Board in the front.

Figure 12.2

L. Building A Fire

WARNING! Risk of Fire! Keep combustible materials, gasoline and other flammable vapors and liquids clear of the fireplace.

Do NOT:

- *Store flammable materials close to the fireplace, or*
- *USE GASOLINE, LANTERN FUEL, KEROSENE, CHARCOAL LIGHTER FLUID OR SIMILAR LIQUIDS TO START OR "FRESHEN UP" A FIRE IN THIS FIREPLACE.*

Keep all flammable liquids well away from the fireplace while it is in use. Combustible materials may ignite.

Before lighting your first fire in the appliance:

1. Confirm the baffle and ceramic blanket are correctly positioned. See **page 12** for detailed diagrams. They should be even with the front tube and resting on all tubes. **Figure 13.1.**
2. Remove all labels from glass.

There are many ways to build a fire. The basic principle is to light easily-ignitable tinder or paper, which ignites the fast burning kindling, which in turn ignites the slow-burning firewood. Here is one method that works well:

1. Open the Burn Rate Air and Start-Up Air Controls fully.
2. Place several wads of crushed paper on the firebox floor. Heating the flue with slightly crumpled newspaper before adding kindling keeps smoke to a minimum.
3. Lay small dry sticks of kindling on top of the paper.
4. Make sure that no matches or other combustibles are in the immediate area of the appliance. Be sure the room is ventilated and the flue unobstructed.
5. Light the paper in the appliance. NEVER light or rekindle fire with kerosene, gasoline, or charcoal lighter fluid; the results can be fatal.
6. Once the kindling is burning quickly, add several full-length logs 3 to 4 inches (76 to 102mm) in diameter. Be careful not to smother the fire. Stack the pieces of wood 1/2 inch to 1 inch apart; near enough to keep each other hot, but far enough away from each other to allow air flow between them.
7. Set the Burn Rate Air Control and activate the timer system (ACC).
8. If you have installed the optional blower, please note that the blower tends to cool the appliance. Leave the blower off until the burn is well established, i.e., 30 minutes.

WARNING! Risk of Fire!

Make sure fuel door is sealed tight against the gasket.
Do NOT operate stove with the door open. It may cause:

- *Overfire condition*
- *Flame and/or smoke spillage*

9. When ready to reload, It is best to fully open both the Burn Rate Air and Start-up Air Controls ***before reloading***.

- This livens up the coalbed and reduces excessive emissions (opacity/smoke).
- Open door slowly so that ash or smoke does not exit appliance through opening.
- Large logs burn slowly, holding a fire longer.
- Small logs burn fast and hot, giving quick heat.

10. As long as there are hot coals, repeating steps 6 through 8 will maintain a continuous fire throughout the season.

NOTICE:
- *Build fire on brick firebox floor.*
- *Do NOT use grates, andirons or other methods to support fuel as it will adversely affect emissions.*

CAUTION! Odors and vapors released during initial operation may be irritating to sensitive individuals. *Open windows for air circulation.*

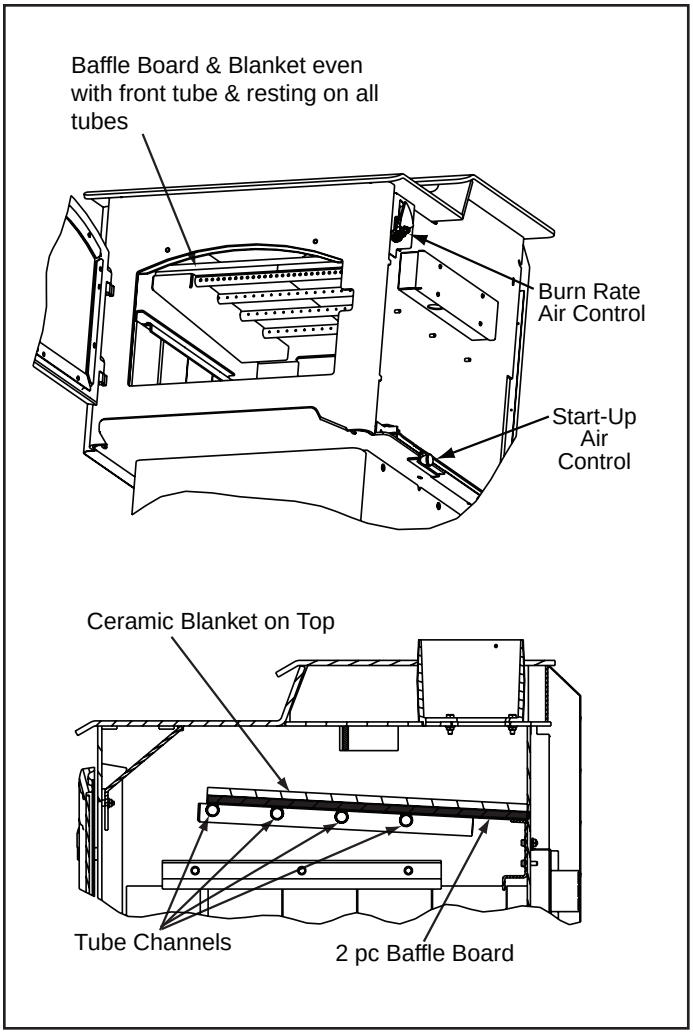

Figure 13.1

M. Wood Fuel

WARNING! Risk of Fire!

- *DO NOT BURN GARBAGE OR FLAMMABLE FLUIDS SUCH AS GASOLINE, NAPTHA OR ENGINE OIL.*
- *Do NOT burn treated wood or wood with salt (driftwood).*
- *May generate carbon monooxide if burn material other than wood.*

May result in illness or possible death.

Hardwood vs Softwood

Your appliance performance depends on the quality of the firewood you use.

- Seasoned wood contains about 8,000 BTUs per pound .
- Hard woods are more dense than soft woods.
- Hard woods contain 60% more BTUs than soft woods.
- Hard woods require more time to season, burn slower and are harder to ignite.
- Soft woods require less time to dry, burn faster and are easier to ignite.
- Start the fire with softwood to bring the appliance up to operating temperature and to establish draft.
- Add hardwood for slow, even heat and longer burn time.

Soft woods	*Hard woods*
• Douglas Fir	• Oak
• Pine	• Maple
• Spruce	• Apple
• Cedar	• Birch
• Poplar	
• Aspen	
• Alder	

Processed Solid Fuel Fire Logs

- **NOT** permitted for use in this appliance

Moisture

WARNING! Risk of Fire!

- *Do NOT burn wet or green wood.*
- *Wet, unseasoned wood can cause accumulation of creosote.*
- *Store wood in dry location.*
- *Stack wood so both ends are exposed to air.*

The majority of the problems appliance owners experience are caused by trying to burn wet, unseasoned wood.

- Wet, unseasoned wood requires energy to evaporate the water instead of heating your home, and
- Causes evaporating moisture which cools your chimney, accelerating formation of creosote.

Seasoned Wood

- Cut logs to size
- Split to 6 inches (152 mm) or less in diameter.
- Air dry to a moisture content of around 20%
  - *Soft wood - about nine months to dry
  - *Hard wood - about eighteen months to dry

*__NOTE:__ Seasoning time may vary depending on drying conditions.

Storing Wood

Steps to ensure properly seasoned wood:

- Stack wood to allow air to circulate freely around and through woodpile.
- Elevate wood pile off ground to allow air circulation underneath.
- Smaller pieces of wood dry faster. Any piece over 6 inches (152 mm) in diameter should be split.
- Wood (whole or split) should be stacked so both ends of each piece are exposed to air. More drying occurs through the cut ends than the sides.
- Store wood under cover to prevent water absorption from rain or snow. Avoid covering the sides and ends completely.

WARNING! Risk of Fire! DO NOT store wood:

- *In front of the appliance.*
- *In space required for loading or ash removal.*

N. Blower Operating Instructions

NOTE: If your Quadra-Fire wood appliance is equipped with an optional blower, you should follow these guidelines:

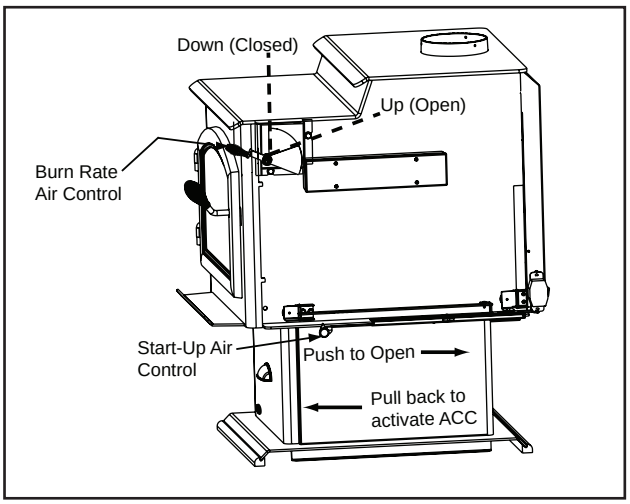

Figure 15.1

1. **Initial (cold) startup:** Open both controls fully by raising the Burn Rate Air Control all the way up until it stops and slide the Start-up Air Control back until it stops. The blower tends to cool the appliance. Leave the blower off until the burn is well established, i.e., 30 minutes.
2. **High Burn Setting:** Both controls are open. Burn Rate Air Control is pulled up and the Start-up Air Control is fully pushed in. Blower may remain on.
3. **Medium or Medium High Burn Setting*:** Burn Rate Air Control is closed then opened to 1 inch to fully open. Blower may remain on.
4. **Medium Low Burn Setting*:** Burn Rate Air Control is closed then opened to 1/4 inch to 1/2 inch. Leave the blower off until the burn is well established, i.e., 30 minutes.
5. **Low Burn Setting*:** Burn Rate Air Control is closed. Leave the blower off until the burn is well established, i.e., 30 minutes.

   ***NOTE:** For burn settings 3 to 5 the Start-up Air Control needs to be pushed in (Open) then pulled back to activate the Automatic Combustion Control (ACC).

   NOTE: For maximum efficiency and lowest emissions, when operating the blower in either the automatic or manual setting for the low and medium low burn settings leave the blower off until the burn is well established, i.e., 30 minutes

6. The blower is equipped with a rheostat (speed control). The highest blower speed is obtained by turning the rheostat on, then adjusting back towards “OFF” as far as possible without turning the blower off. For a low blower speed, turn the control knob clockwise as far as possible

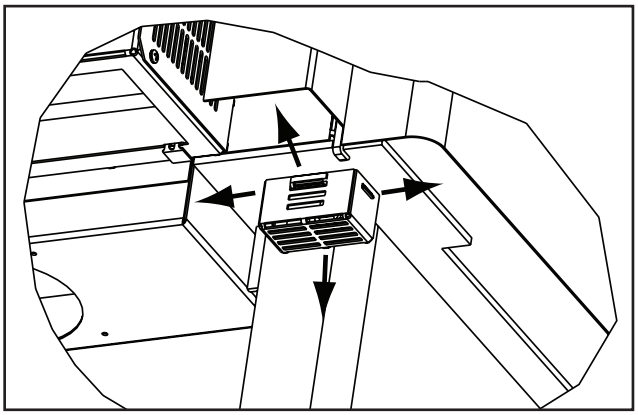

Figure 15.2 - Snap Disc Location

7. **Snap Disc Location**

   If you find the blower coming on and off at undesirable temperatures, relocate the snap disc to another location in the designated zone on the back of the appliance. **Figure 15.2.** There is a manual over-ride switch to deactivate the snap disc, if necessary. **See page 45** for location of over-ride switch.

O. Clear Space

- Do NOT place combustible objects within 4 ft (1.2 m) of the front of appliance. See **Figure 15.3**.

  ***WARNING!** Do NOT place combustible objects in front of the appliance. High temperatures may ignite clothing, furniture or draperies.*

- Mantel - avoid placing candles and other heat-sensitive objects on mantel or hearth. Heat may damage these objects.

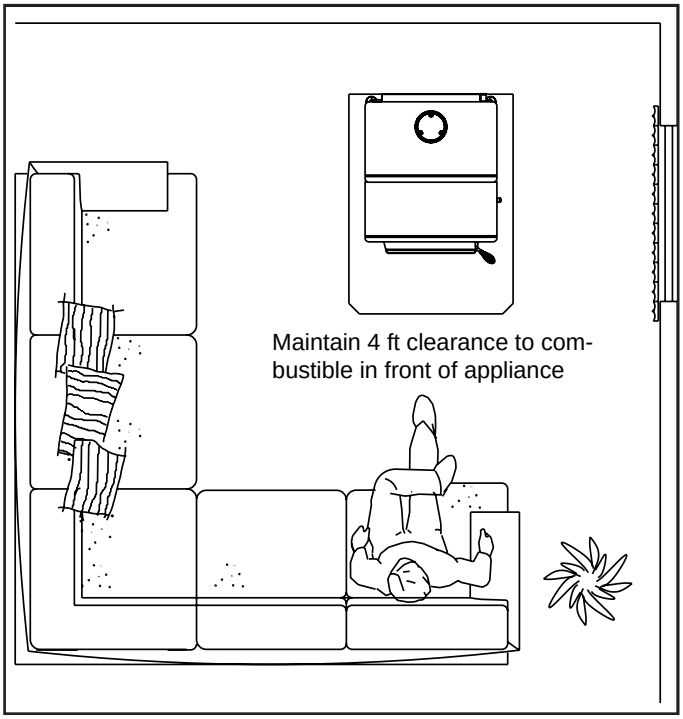

Figure 15.3

P. Opacity (Smoke)

Opacity is the measure of how cleanly your appliance is burning.

Opacity is measured in percent:

- 100% opacity is when an object is totally obscured by the smoke column from a chimney, and
- 0% opacity means that no smoke column can be seen.

As you become familiar with your appliance, you should periodically check the opacity. This will allow you to know how to burn as nearly smoke-free as possible (goal of 0% opacity).

CAUTION! Odors and vapors released during initial operation may be irritating to sensitive individuals. *Open windows for air circulation.*

Q. Frequently Asked Questions

ISSUES	SOLUTIONS
Odor from appliance	When first operated, this appliance may release an odor for the first several hours. This is caused by the curing of the paint and the burning off of any oils remaining from manufacturing.
Metallic noise	Noise is caused by metal expanding and contracting as it heats up and cools down, similar to the sound produced by a furnace or heating duct. This noise does not affect the operation or longevity of the appliance.
Whirring sound	If the optional blower has been installed, the blower produces a whirring sound which increases in volume as the speed is increased.

3 Maintenance and Service

A. Ash Removal System Operating and Cleaning

- **Frequency:** As Necessary
- **By:** Homeowner

CAUTION! Risk of Injury! *Gloves are recommended as there may be sharp edges.*

1. The stove and ashes must be completely cooled down before using the Ash Removal System (ARS).

   Reach down and locate the ash removal door handle under the left side of the stove in the center. Squeeze the handle and push all the way back. A magnet will hold the handle in place which in turn holds the ash door open.

   Use the tool included in your component pack to remove the ARS access cover plate.

2. Clean ash down through the exposed opening and into the drawer below.

   Make sure all ash is removed from the top of ARS door.

   You can rapidly move the ARS latch handle up and down to help remove any ash from the door. Use a small brush to clean off the top of the door if any ash remains. **Figure 17.1**.

   Be sure to replace the ARS access cover before operating the stove. Remember to leave 1/4 to 1/2 inch (6-13mm) of ash on the firebox floor to act as a natural insulation. This will lengthen the life of the firebrick.

3. Close the door handle, you will hear a “click” when it closes. The ash drawer will not pull out if the door handle is left in the open position. **Wear gloves to remove the drawer.** Dispose of the ashes properly as described in your owner’s manual.

WARNING! Risk of Fire!

Make sure Ash Removal System door is sealed tight against the gasket. Air leakage may cause:

- *Overfire condition*
- *Flame and/or smoke spillage*
- *Wood to burn too fast*

Do NOT use Ash Removal System while stove is burning

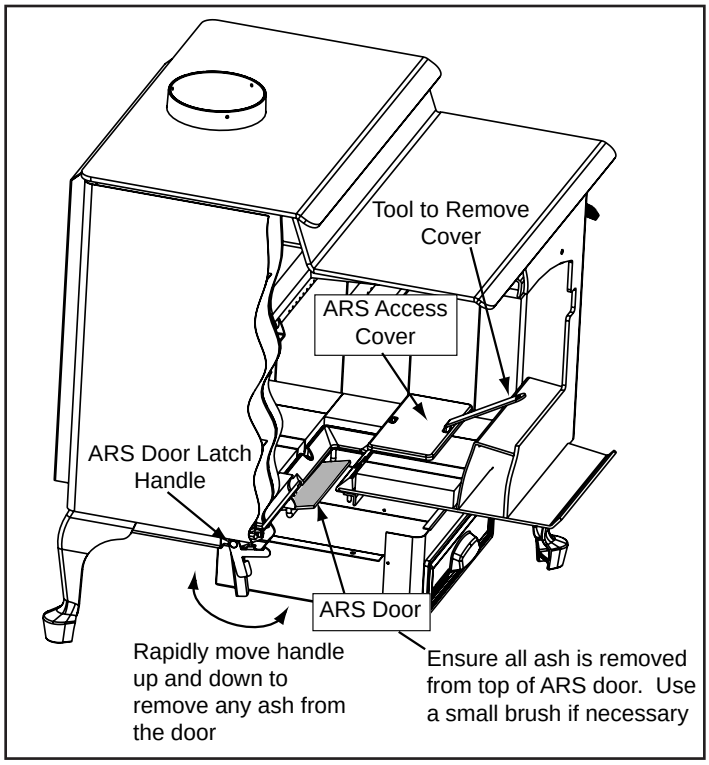

Figure 17.1

B. Disposal of Ashes

- **Frequency:** When ash is within 1-3/4 inch (44mm) of firebox lip. Leave 1/4 to 1/2 inch (6-13mm) of ash in the bottom of the firebox.
- **By:** Homeowner

WARNING! Risk of Fire! *Ashes could contain hot embers.*

- Place ashes in a metal container with a tight-fitting lid.
- The closed container should be placed on a non-combustible floor or on the ground, well away from all combustible materials, pending final disposal.
- If the ashes are disposed of by burial in soil or otherwise locally dispersed, they should be retained in the closed container until all cinders have thoroughly cooled

C. Chimney and Chimney Connector Inspection/Cleaning

- **Frequency:** Every 2 months during heating season or as recommended by a certified chimney sweep; more frequently if chimney exceeds or is under 14-16 ft (4.3-4.8m). (measured from base of appliance)
- **By:** Certified Chimney Sweep

WARNING! Risk of Fire! *Ignited creosote is extremely HOT. Prevent creosote buildup.*

- Remove all ash from the firebox and extinguish all hot embers before disposal.
- Allow the appliance to cool completely.
- Disconnect flue pipe or remove baffle and ceramic blanket from appliance before cleaning chimney. Otherwise residue can pile up on top of the baffle and ceramic blanket. (See Baffle Removal on **page 23**).
- Close the door tightly.
- The creosote or soot should be removed with a brush specifically designed for the type of chimney in use.
- Clean out fallen ashes from the firebox.
- It is also recommended that before each heating season the entire system be professionally inspected, cleaned and repaired if necessary.

WARNING! Risk of Fire!

Do not use chimney cleaners or flame colorants in your appliance. It will corrode your pipe.

Creosote - Formation and Need for Removal

- When wood is burned slowly, it produces tar and other organic vapors, which combine with expelled moisture to form creosote.
- The creosote vapors condense in the relatively cool chimney flue of a slow-burning fire.
- As a result, creosote residue accumulates on the flue lining. When ignited this creosote makes an extremely hot fire.
- The chimney and chimney connector shall be inspected every two months during the heating season to determine when a creosote buildup has occurred.
- When creosote has accumulated it shall be removed to reduce the risk of a chimney fire.

D. Appliance Inspection - Routine

- **Frequency:** Every 2 months at the same time the chimney and chimney connector are inspected.
- **By:** Homeowner

Check for:

- Cracks in glass
- Door handle - smooth cam operation
- Baffle and ceramic blanket correct placement
- Baffle for warpage
- Firebrick for cracks, broken or crumbly
- Door gasket. (Dollar bill test). Place a dollar bill between the stove and the door and then shut the door. If you can pull the dollar bill out, replace the door gasket.
- Glass frame for loose screws

E. Glass Cleaning

- **Frequency:** As desired
- **By:** Homeowner

- Clean glass with a non-abrasive glass cleaner. Abrasive cleaners may scratch and cause glass to crack.
- If the deposits on the glass are not very heavy, normal glass cleaners work well. Heavier deposits may be removed by using a damp cloth dipped in wood ashes or by using a commercially available oven cleaner.
- After using an oven cleaner, it is advisable to remove any residue with a glass cleaner or soap and water. Oven cleaner left on during the next firing can permanently stain the glass and damage the finish on plated metal surfaces.
- A portion of the combustion air entering the firebox is deflected down over the inside of the door glass.
- This air flow “washes” the glass, helping to keep smoke from adhering to its surface.
- When operated at a low burn rate, less air will be flowing over the glass and the smoky, relatively cool condition of a low fire will cause the glass to become coated.
- Operating the appliance with the Burn Rate Air Control and Start-Up Air Control all the way open for 15-20 minutes should remove the built up coating.

CAUTION! Handle glass assembly with care. Glass is breakable.

- *Avoid striking, scratching or slamming glass*
- *Avoid abrasive cleaners*
- *Do not clean glass while it is hot*

F. Firebrick Inspection

- **Frequency:** After each ash removal
- **By:** Homeowner

Replace the firebrick if they become, cracked, broken, crumbly and/or if there is a 1/4 inch (6.35mm) gap between the bricks.

The firebox is lined with high quality firebrick, which has exceptional insulating properties. There is no need to use a grate; simply build a fire on the firebox floor. Do not operate appliance without firebrick.

1. After the coals have completely cooled, remove all old brick and ash from unit and vacuum firebox.
2. Remove new brick set from box and lay out to diagram shown.
3. Lay bottom bricks in unit.
4. Install rear bricks on the top of the bottom bricks. Slide top of bricks under clip on back of firebox wall and push bottom of brick back.
5. Install side bricks. Slide top of brick under clips on side of firebox and push the bottom of the brick until it is flush with the side of the unit.

Use Part 832-0550 when ordering individual brick. Provide brick dimension or copy this page, mark the desired brick and take it to your authorized dealer.

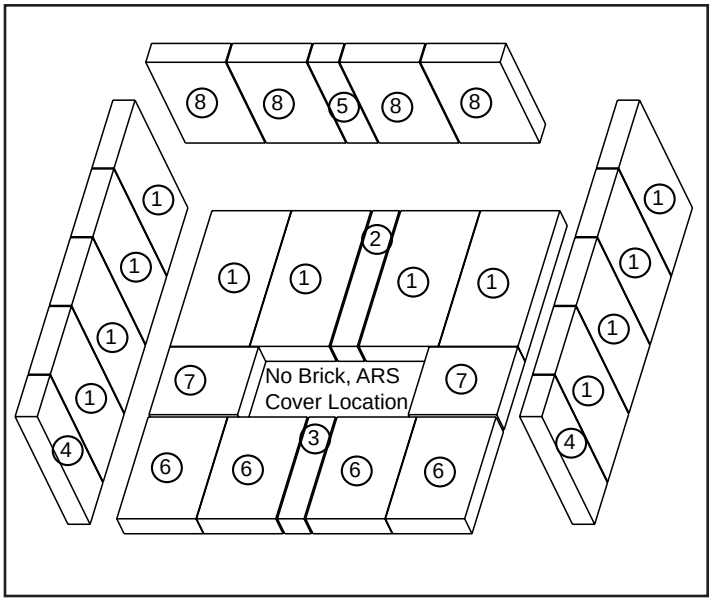

Figure 19.1

No.	Brick Size	Qty
1	9 x 4-1/2 x 1-1/4	12
2	9 x 1-3/4 x 1-1/4	1
3	6-3/4 x 1-3/4 x 1-1/4	1
4	9 x 2-3/4 x 1-1/4	2
5	7 x 1-1-3/4 x 1-1/4	1
6	6-3/4 x 4-1/2 x 1-1/4	4
7	5 x 4-1/2 x 1-1/4	2
8	7 x 4-1/2 x 1-1/4	4

G. Cleaning Plated Surfaces

- **Frequency:** As desired
- **By:** Homeowner

- Clean all the fingerprints and oils from plated surfaces **BEFORE** firing the appliance for the first time.
- If not cleaned properly before lighting your first fire, the oils can cause permanent markings on the plating.
- After the plating is cured, the oils will not affect the finish and little maintenance is required.
- Wipe clean as needed.

CAUTION! Do not use polishes with abrasives. *It will scratch plated surfaces.*

H. Quick Reference Maintenance Guide

BAFFLE & BLANKET PLACEMENT

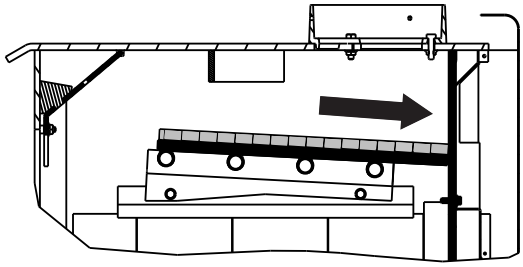

Baffle and blanket placement is critical to heat output, efficiency and overall life of the unit. Make sure the baffle is pushed all of the way to the back of the firebox and the blanket is laying flat.

INSPECT FIREBRICKS & ASH COVER

(AFTER EACH CLEANING)

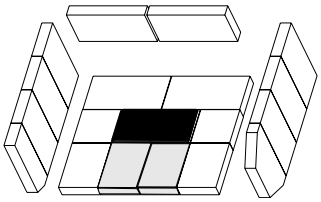

Step Top Models Only

Firebrick is designed to protect your firebox. Replace firebricks that are crumbling, cracked or broken. If you have an optional ash door, check to make sure the door is closing properly.

CHIMNEY & CAP INSPECTION

The chimney and chimney cap must be inspected for soot and creosote during the burn season. This will prevent pipe blockage, poor draft, and chimney fires.

Always burn dry wood to help prevent cap blockage and creosote build-up.

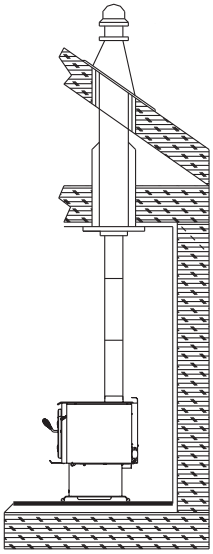

DOOR & LATCH CHECK

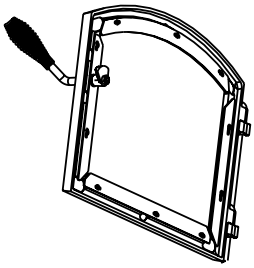

Keeping the door and glass gasket in good shape will maintain good burn times on a low burn setting.

Check the glass frame for loose screws to prevent air leakage.

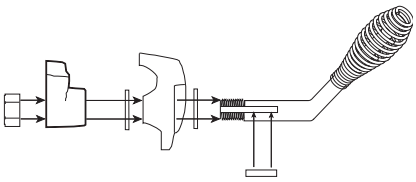

Check the door latch for proper adjustment. This is very important especially after the door rope has formed to the stove face.

Start the first inspection of your unit after the first 2 months of use, or if performance changes, and adjust your schedule accordingly.

Maintenance is required for safe operation and must be performed to maintain your warranty.

4 Troubleshooting Guide

With proper installation, operation, and maintenance your woodstove will provide years of trouble-free service. If you do experience a problem, this troubleshooting guide will assist you or a qualified service person in the diagnosis of a problem and the corrective action to be taken.

Start Fire Problems	Possible Cause	Solution
Can not get fire started Excessive smoke or spillage Burns too slowly Not enough heat output	Not enough kindling/paper or no kindling/paper	Use dry kindling, more paper. Arrange kindling & wood for air movement.
	Not enough air for fire to ignite	Check for restricted termination cap
		Check for blockage of outside air kit (if installed).
		Check for flue blockage.
		Pre-warm flue before starting fire (refer to Building a Fire Section).
		Check for adequate vent height (refer to Chimney Height Section).
		Open window below the appliance towards the wind.
	Wood condition is too wet, too large	Use dry, seasoned wood (refer to Seasoned Wood Section).
	Bed of coals not established before adding wood	Start with paper & kindling to establish bed of coals (refer to Building a Fire Section).
	Flue blockage such as birds' nests or leaves in termination cap	Have chimney inspected for creosote and cleaned by a certified chimney sweep.
	Down draft or negative pressure Competition with exhaust devices	Do not use exhaust fans during start-up (refer to Negative Pressure Section).
		Open window below the appliance towards the wind.
Fire burns too fast	Extremely dry or soft wood	Mix in hardwood.
		Mix in less seasoned wood after fire is established (refer to Wood Fuel Section).
	Overdrafting	Check for correct vent height; too much vertical height creates overdrafting.
		Check location of vent termination (refer to Chimney Termination Requirement Section).

5 Service Parts Replacement

A. Glass Replacement

1. Ensure that the fire is out and the appliance is cool to the touch.
2. Protect a table or counter top with padding or towels. Protect your hands and wear gloves to prevent injury.
3. Remove the door with the broken glass by lifting the door up and off of the hinges.
4. Lay door face down on a table or counter making sure the handle hangs over the edge so the door lays flat, on a soft surface.
5. Remove the screws from each glass retainer and remove the glass. (If screws are difficult to remove, soak with penetrating oil first).
6. Center the glass with edges evenly overlapping the opening in the door, (i.e. same space top and bottom, left and right sides).
7. Replace the glass retainers. Be careful not to cross thread the screws.
8. Tighten each retainer just a few turns until each is secured. Check again for centering of glass in door frame. Continue to tighten each retainer alternately, a few turns at a time, until the glass is secure. DO NOT OVERTIGHTEN - can cause glass to break.
9. Replace the door on the appliance.

WARNING! Risk of Fire or Injury!
Use only glass that is specified in the manual, DO NOT replace with any other material. Glass breakage will occur.

CAUTION!

Handle glass with care.

- *Inspect the gasket to ensure it is undamaged.*
- *Do NOT strike, slam or scratch glass.*
- *Do NOT operate appliance with glass & door assembly removed.*
- *Do NOT operate with glass cracked, broken or scratched.*

Quadra-Fire appliances are equipped with ceramic super heat-resistant glass, which can only be broken by impact or misuse.

B. Snap Disc Replacement

1. Disconnect power supply. Locate the snap disc bracket assembly at the bottom left rear corner of the appliance. **Figure 22.1.**
2. A magnet holds the bracket to the appliance. Pull the bracket down away from the appliance to expose the snap disc.
3. Pull the snap disc and spade connectors up and out of bracket as shown in **Figure 22.2.**
4. Using a Phillips head screw driver, remove the 2 screws from the snap disc and then remove the snap disc from the spade connectors. Replace with new snap disc and re-connect to spade connectors.
5. Push the snap disc and spade connectors back inside bracket and re-attach the bracket to the appliance.

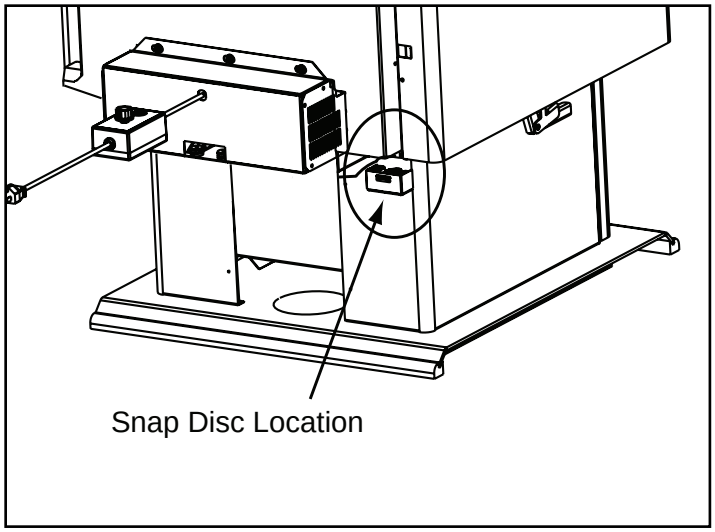

Figure 22.1

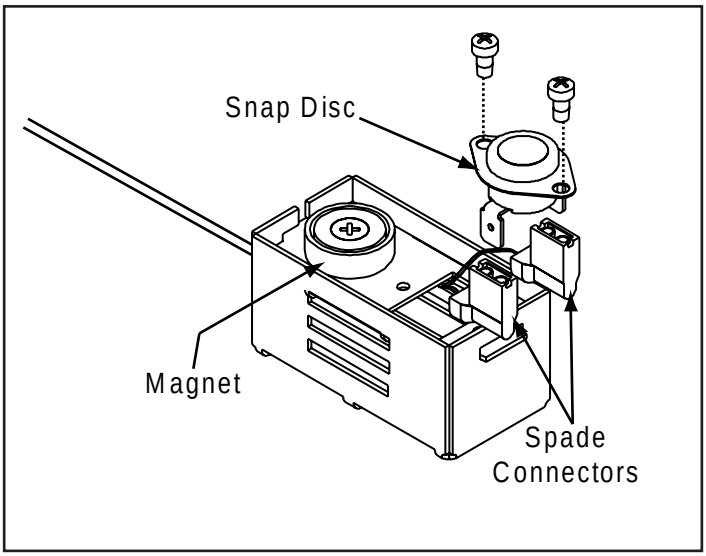

Figure 22.2

C. Baffle Removal

1. Remove all ash from the firebox, and extinguish all hot embers before disposal into a metal container.
2. The baffle board has 2 pieces. With the ceramic blanket still in place, slide one baffle piece over the top of other one and put out top piece through the door opening and then remove bottom baffle piece. **Figure 23.1.**
3. Remove the ceramic blanket.
4. Re-install the ceramic blanket and smooth out the blanket.
4. Slide the baffle pieces one piece at a time underneath the blanket. Be sure the baffle boards are even with the front manifold tube and is resting on all tubes. **Figures 23.1 and 23.2.**

Figure 23.1 - Baffle

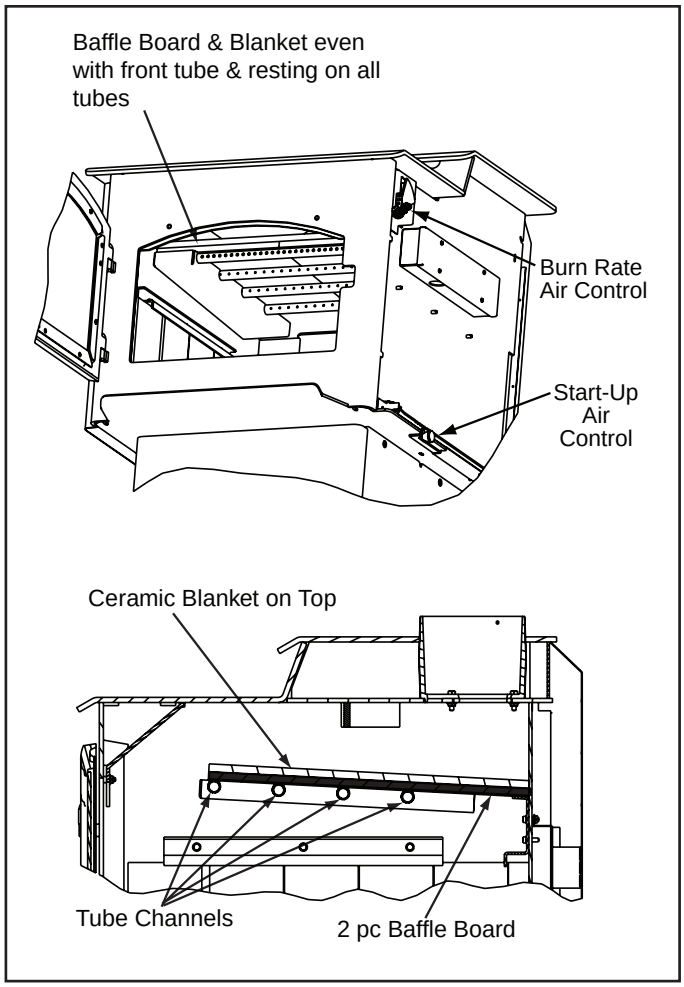

Figure 23.2

D. Door Handle Assembly

1. Install washer on door handle shaft.
2. Slide door handle through door.
3. Install second washer(s) as shown in **Figure 24.1.**
4. Install key in groove.
5. Align groove in latch cam with key; slide latch cam over shaft
6. Install locknut but do not overtighten, the handle needs to move smoothly.
7. Install spring handle turning in a counter-clockwise motion to desired location on door handle rod. **Figure 24.1.**

CAUTION! *Do not overtighten lock nut. The door handle needs to move smoothly.*

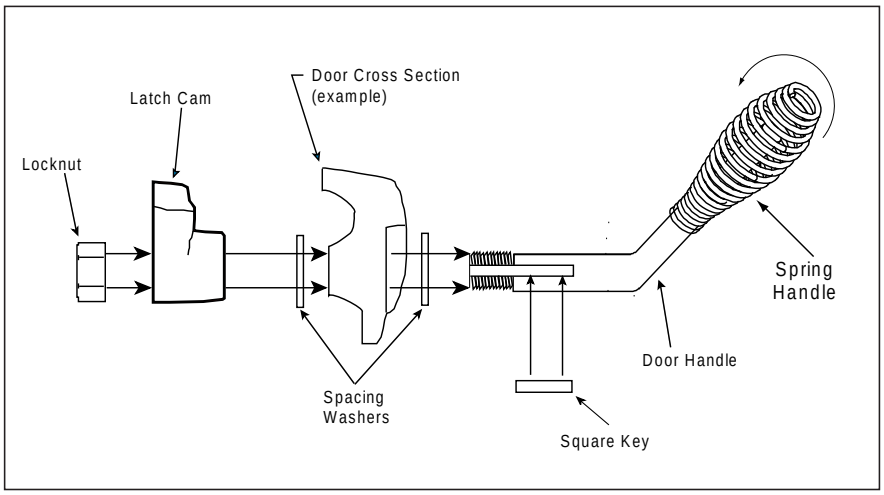

Figure 24.1

E. Tube Channel Assembly Replacement

Removing Tube Channel Assembly

1. Remove the right side bricks (5 pieces) and right hand rear brick.
2. Remove the 2 brick retainers by sliding back and then up.
3. Remove the baffle protection channel by rolling forward and out of the firebox.
4. Locate the 2 channel nuts and 1 bolt inside of chamber and remove using a 7/16 socket wrench.

NOTE: Soak the bolts with penetrating oil for at least 15 minutes before trying to remove them.

5. Slide the tube channel assembly all the way to left until it is off the threads. Drop the right side down, then slide the assembly back to right.
6. The ceramic blanket and both baffle boards can be removed at the same time you remove the tube channel assembly.
7. When the tube channel assembly is free of the left side support, rotate clockwise and pull assembly, blanket and baffles out through the front opening.
8. Re-install in reverse order.

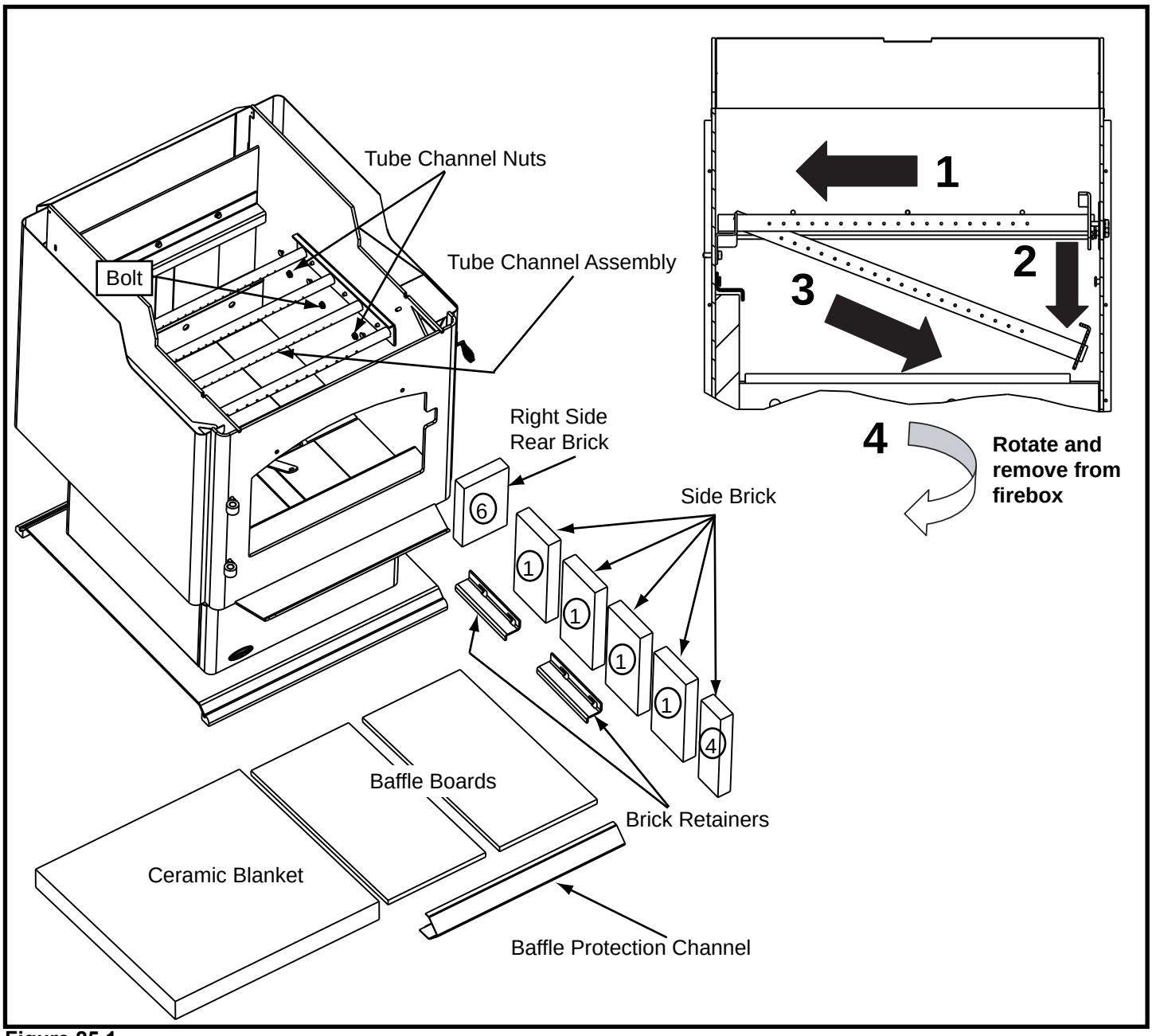

Figure 25.1

Installer's Guide

6 Getting Started

A. Design and Installation Considerations

NOTICE: *Check building codes prior to installation.*

- Installation MUST comply with local, regional, state and national codes and regulations.
- Consult insurance carrier, local building inspector, fire officials or authorities having jurisdiction over restrictions, installation inspection and permits.

Before installing, determine the following:

- Type of chimney connector to be used
  - Single wall, vertical or horizontal
  - Double wall, vertical or horizontal
- Consult **page 30** for clearances to combustibles
- Power outlet located close by for optional blower

B. Draft

Draft is the pressure difference needed to vent appliances successfully. When a appliance is drafting successfully, all combustion byproducts are exiting the home through the chimney.

Considerations for successful draft include:

- Preventing negative pressure
- Location of appliance and chimney

To be sure that your appliance burns properly:

- During a low burn, the chimney draft (static pressure) should be approximately -.04 inch water column (W.C.)
- During a high burn the chimney draft should be approximately -.10 inch (W.C.)
- Measure the W.C at 6 inches (152mm) above the top of the appliance after one hour of operation at each burn setting.

NOTICE: *Hearth & Home Technologies assumes no responsibility for the improper performance of the appliance system caused by:*

- *Inadequate draft due to environmental conditions*
- *Downdrafts*
- *Tight sealing construction of the structure*
- *Mechanical exhausting devices*

C. Negative Pressure

WARNING! Risk of Asphyxiation! *Negative pressure can cause spillage of combustion fumes and soot. Fire must draft properly for safe operation.*

Negative pressure results from the imbalance of air available for the fireplace to operate properly. It can be strongest in lower levels of the house.

Causes include:

- Exhaust fans (kitchen, bath, etc.)
- Range hoods
- Combustion air requirements for furnaces, water heaters and other combustion appliances
- Clothes dryers
- Location of return-air vents to furnace or air conditioning
- Imbalances of the HVAC air handling system
- Upper level air leaks such as:
  - Recessed lighting
  - Attic hatch
  - Duct leaks

To minimize the effects of negative air pressure:

- Install the outside air kit with the intake facing prevailing winds during the heating season
- Ensure adequate outdoor air for all combustion appliances and exhaust equipment
- Ensure furnace and air conditioning return vents are not located in the immediate vicinity of the fireplace
- Avoid installing the fireplace near doors, walkways or small isolated spaces
- Recessed lighting should be a "sealed can" design
- Attic hatches weather stripped or sealed
- Attic mounted duct work and air handler joints and seams taped or sealed
- Basement installations should be avoided

D. Locating Your Stove & Chimney

Location of the appliance and chimney will affect performance. As shown in **Figure 27.1** the chimney should:

- Install through the warm space enclosed by the building envelope. This helps to produce more draft, especially during lighting and die down of the fire.
- Penetrate the highest part of the roof. This minimizes the affects of wind turbulence and down drafts.
- Consider the appliance location in order to avoid floor and ceiling attic joists and rafters.
- Locate termination cap away from trees, adjacent structures, uneven roof lines and other obstructions.

Your local dealer is the expert in your geographic area and can usually make suggestions or discover solutions that will easily correct any flue problems you may encountered.

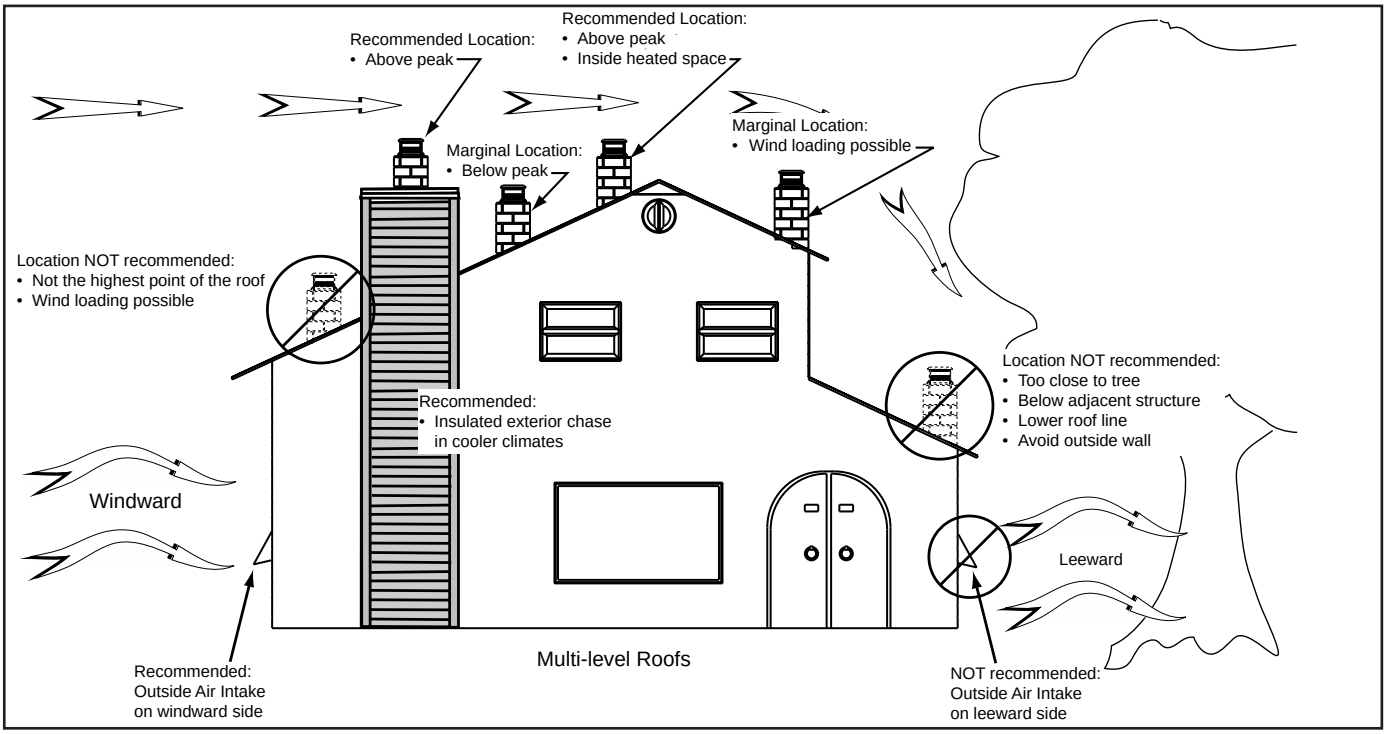

Figure 27.1

E. Chimney Termination Requirements

Follow manufacturer's instructions for clearance, securing flashing and terminating the chimney.

- Must have an approved and Listed cap
- Must not be located where it will become plugged by snow or other material
- Must terminate at least 3 feet (91cm) above the roof **and** at least 2 feet (61cm) above any portion of the roof within 10 feet (305cm).
- Must be located away from trees or other structures

NOTICE: *Locating the appliance in a basement or in a location of considerable air movement can cause intermittent smoke spillage from appliance. Do not locate appliance near*

- *Frequently open doors*
- *Central heat outlets or returns*

***NOTICE*:**

- *Chimney performance may vary.*
- *Trees, buildings, roof lines and wind conditions affect performance.*
- *Chimney height may need adjustment if smoking or overdraft occurs.*

F. 2-10-3 Rule

These are safety requirements and are not meant to assure proper flue draft.

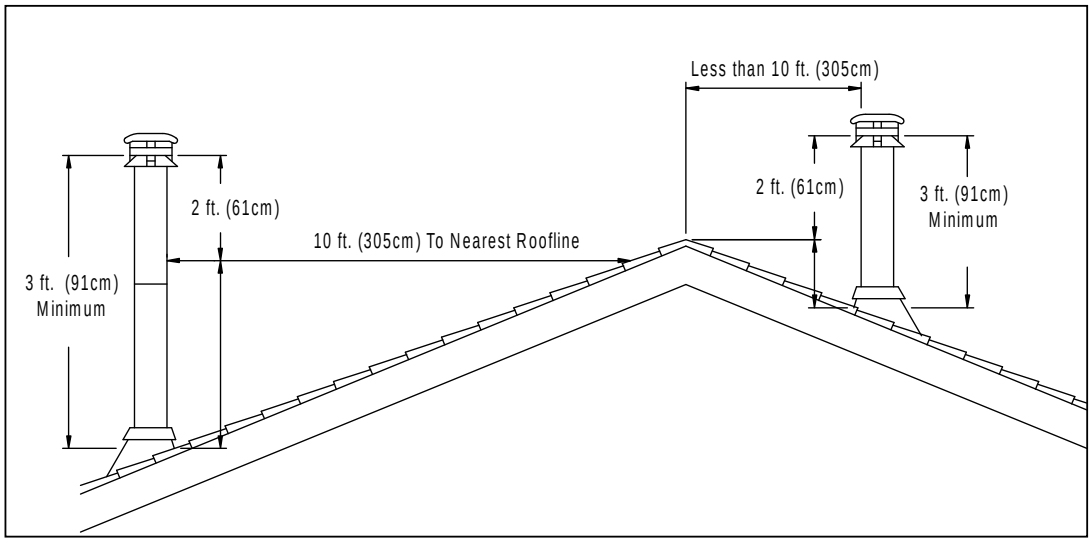

Pitched Roof

Figure 28.1

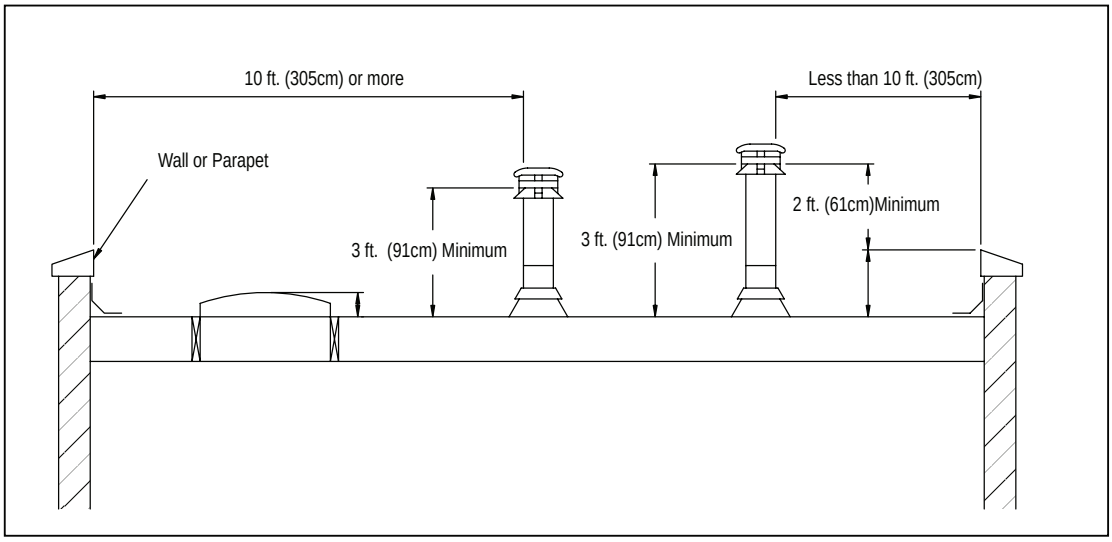

Flat Roof

Figure 28.2

G. Tools And Supplies Needed

Before beginning the installation be sure the following tools and building supplies are available:

Reciprocating saw	Framing material
Pliers	High temp caulking material
Hammer	Gloves
Phillips screwdrive	Framing square
Flat blade screwdriver	Electric drill and bits
Plumb line	Safety glasses
Level	Tape measure
1/2-3/4 in. length, #6 or #8 self-drilling screws	Misc screws and nails

H. Fire Safety

To provide reasonable fire safety, the following should be given serious consideration:

1. Install at least one smoke detector on each floor of your home to ensure your safety. They should be located away from the heating appliance and close to the sleeping areas. Follow the smoke detector manufacturer's placement and installation instructions, and be sure to maintain regularly.
2. A conveniently located Class A fire extinguisher to contend with small fires resulting from burning embers.

I. Inspect Appliance and Components

- Remove appliance and components from packaging and inspect for damage.
- Doors are shipped in separate packages.
- Report to your dealer any parts damaged in shipment.
- **Read all the instructions before starting the installation. Follow these instructions carefully during the installation to ensure maximum safety and benefit.**

WARNING! Risk of Fire!
Inspect appliance and components for damage.
Damaged parts may impair safe operation.

- *Do NOT install damaged components.*
- *Do NOT install incomplete components.*
- *Do NOT install substitute components.*

Report damaged parts to dealer.

Pre-Use Check List

	✓	
1.		Place the appliance in a location near the final installation area and follow the procedures below:
2.		Open the appliance and remove all the parts and articles packed inside the Component Pack. Inspect all the parts and glass for shipping damage. Contact your dealer if any irregularities are noticed.
3.		All safety warnings have been read and followed.
4.		This Owner's Manual has been read.
5.		Floor protection requirements have been met.
6.		Venting is properly installed per venting manufacturing instructions.
7.		The proper clearances from the appliance and chimney to combustible materials have been met.
8.		The masonry chimney is inspected by a professional and is clean, or the factory built metal chimney is installed according to the manufacturer's instructions and clearances.
9.		The chimney meets the required minimum height.
10.		All labels have been removed from the glass door.
11.		Plated surfaces have been wiped clean, if applicable.
12.		A power outlet is available nearby if installing optional blower assembly.

7 Dimensions and Clearances

A. Appliance Dimensions

NOTE: Flue Collar size is 6 inch (152mm) diameter (ID)

5700 Pedestal Model

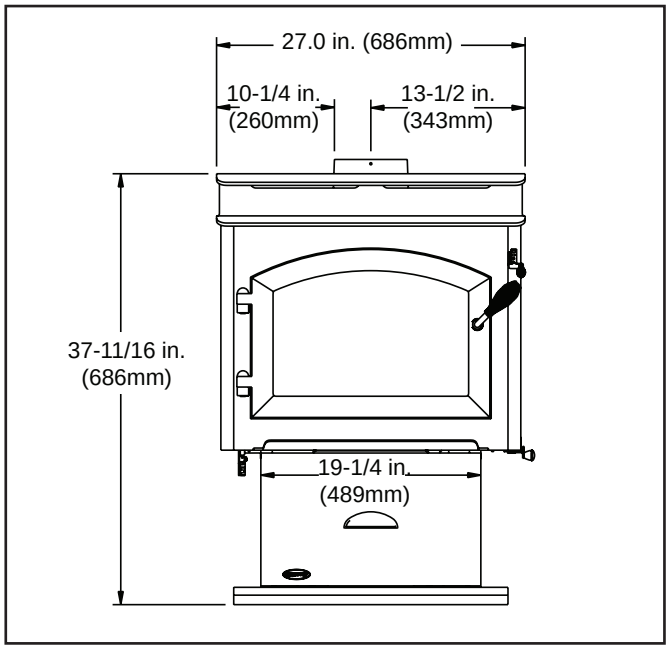

Figure 30.1 - Front View

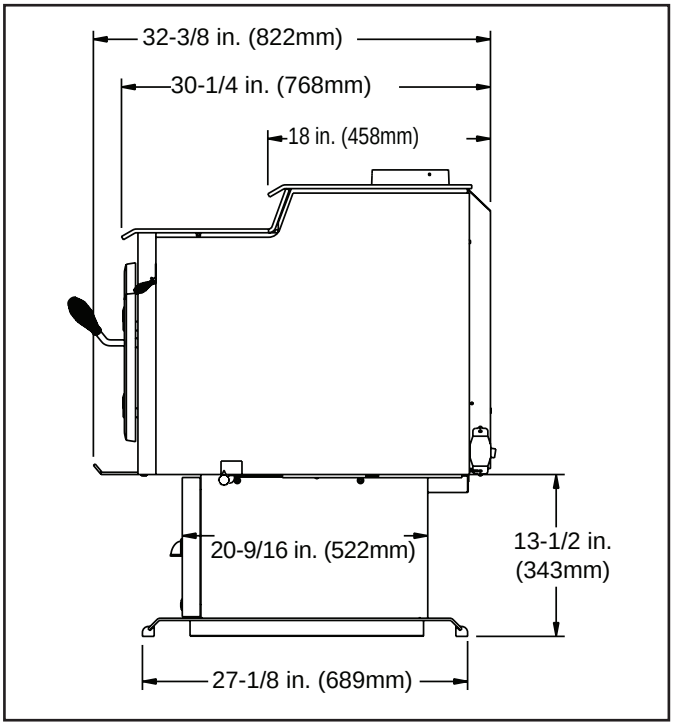

Figure 30.2 - Side View

5700 Leg Model

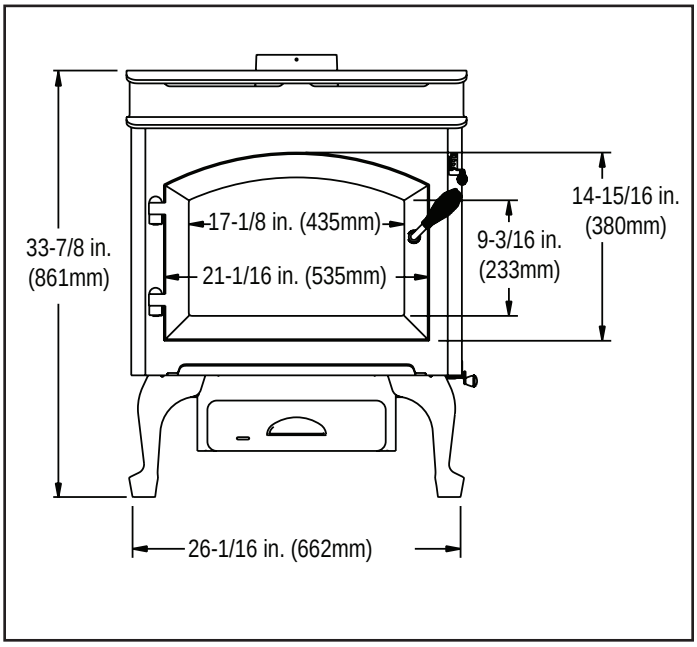

Figure 30.3 - Front View

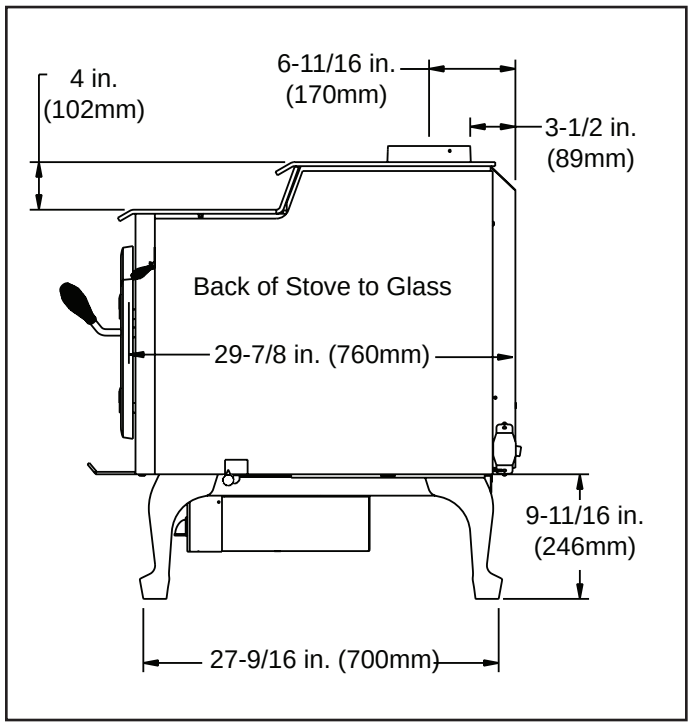

Figure 30.4 - Side View

B. Clearances to Combustibles (UL and ULC)

BACKWALL / SIDEWALL

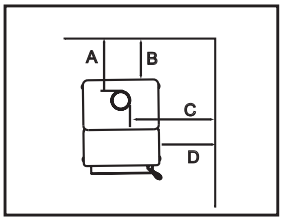

CORNER INSTALLATION

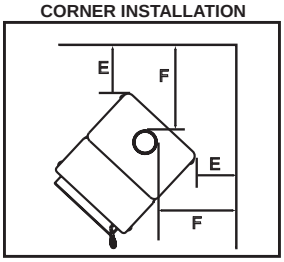

NOTE: Clearances may only be reduced by means approved by the regulatory authority having jurisdiction

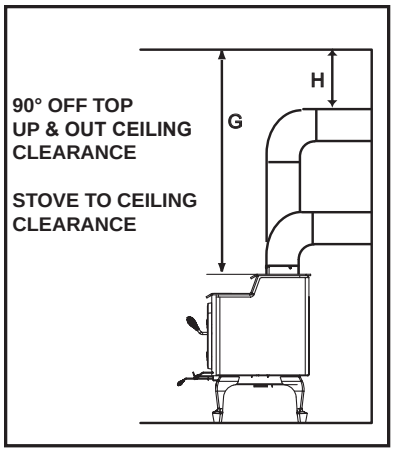

ALCOVE SIDE VIEW

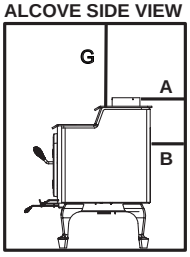

ALCOVE TOP VIEW

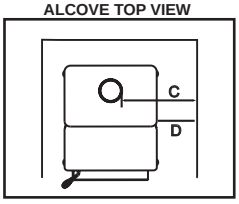

	A	B	C	D	E	F	G	H
INSTALLATION: Full Vertical								
SINGLE WALL PIPE	12.5 (318)	10.5 (267)	25.5 (648)	15 (381)	2 (51)	12 (305)	45 (1143)	N/A
DOUBLE WALL PIPE	9.5 (241)	7.5 (191)	25.5 (648)	15 (381)	2 (51)	12 (305)	45 (1143)	N/A
INSTALLATION: Horizontal with 2 foot minimum vertical Off Stove Top								
SINGLE WALL PIPE	9.5 (241)	7.5 (191)	25.5 (648)	15 (381)	*	*	45 (1143)	18*(457)
DOUBLE WALL PIPE	9.5 (241)	7.5 (191)	25.5 (648)	15 (381)	*	*	45 (1143)	13 (330)
INSTALLATION: 90º ELBOW OFF TOP OF STOVE THROUGH BACKWALL								
SINGLE WALL PIPE	9.5 (241)	7.5 (191)	25.5 (648)	15 (381)	2 (51)	12 (305)	45 (1143)	18*
DOUBLE WALL PIPE	9.5 (241)	7.5 (191)	25.5 (648)	15 (381)	2 (51)	12 (305)	45 (1143)	13 (330)

INSTALLATION: ALCOVE Six inch (6") (152mm) diameter listed Double Wall air insulated connector pipe with UL103 HT** Listed factory-built Class "A" chimney, or a masonry chimney. (Mobile Home must be equipped with a spark arrestor). Maximum depth of Alcove shall be no more than 48 inches (1219mm) with a minimum height of 79.25 (2013mm) from floor to bottom of ceiling and the referenced clearances.

*****In Canada must comply with Standard CAN/ULC-S629-M87 for the 650ºC Factory-built chimney.***

DOUBLE WALL PIPE	10.5 (268)	8.5 (216)	25.5 (648)	15 (381)	N/A	N/A	45 (1143)	*

*** SEE PIPE MANUFACTURERS CLEARANCES - NOT TESTED**

WARNING! Risk of Fire!

- *Comply with all minimum clearanes to combustibles as specified.*
- *Failure to comply may cause house fire.*

C. Hearth Protection Requirements

FLOOR PROTECTION:

- Must be non-combustible material.
- Extend beneath heater and to the front, sides and rear as indicated.
- The floor must be non-combustible or otherwise adequately protected from radiant heat given off by the unit and from sparks and falling embers.
- A layer of thin brick or ceramic tile over a combustible floor is NOT sufficient.

In US installations, it is necessary to install a floor protector of a minimum of 1 inch (k value = 0.49, R value = 0.59) of non-combustilbe material a minimum of 16 inches (406mm) in front of glass and 8 inches (203mm) to both sides of the fuel loading door. Open the door and measure 8 inches (203mm) from the side edge of the opening in the face of the appliance. ***See exception.**

In Canada, similar floor protection must be provided 18 inches (457mm) in front and 8 inches (203mm) from the sides and rear of the appliance. ***See exception.**

***EXCEPTION:** Non-combustible floor protections must extend beneath the flue pipe when installed with horizontal venting and extend 2 inches (51mm) beyond each side. **Figure 32.4.**

WARNING! Risk of Fire!

- *Hearth pads must be installed exactly as specified.*
- *High temperatures or hot embers may ignite concealed combustibles.*

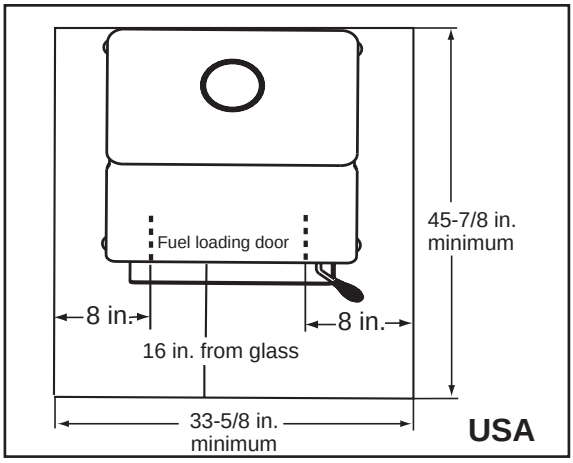

Figure 32.1

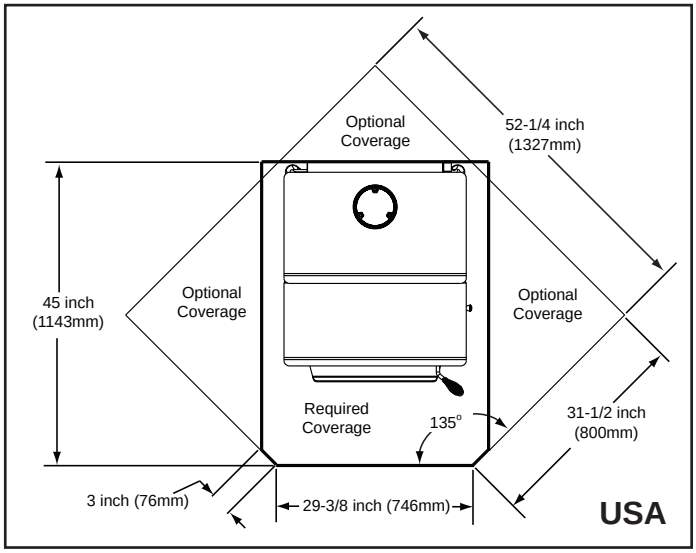

Figure 32.3

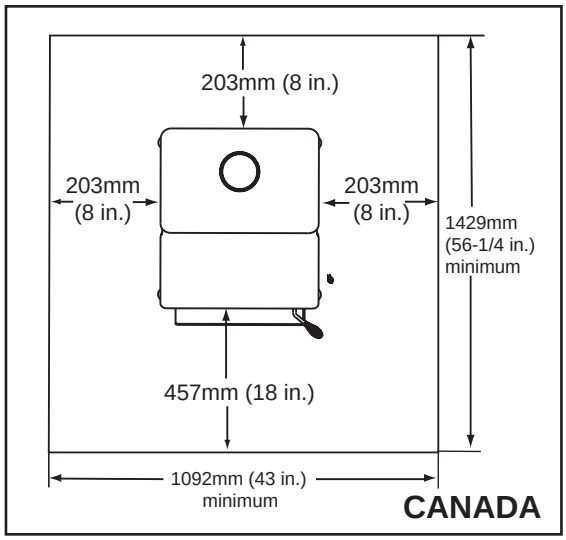

Figure 32.2

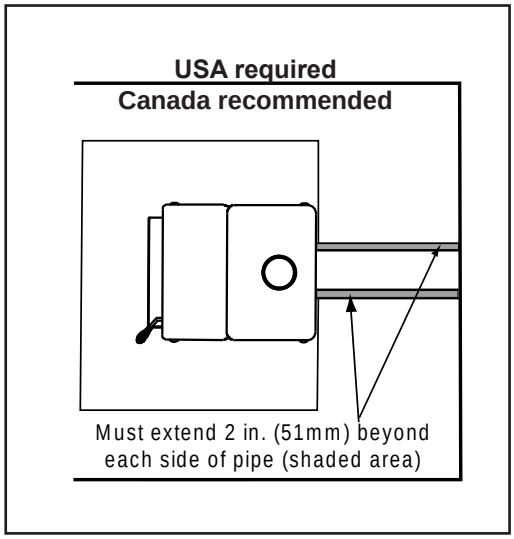

Figure 32.4

NOTICE:
- Illustrations and photos reflect typical installations and are FOR DESIGN PURPOSES ONLY.
- Illustrations/diagrams are not drawn to scale.
- Actual installation may vary due to individual design preference
- Hearth & Home Technologies reserves the right to alter its products.

D. Calculating Alternate Floor Protection Material

Thermal Conductivity: k value

The k value indicates the amount of heat (in BTU's) that will flow in 1 hour throught 1 square foot of a uniform material 1 inch thick for each degree (F) of temperature difference from one side of the material to the other. The LOWER the k factor means less heat is being conducted through the non-combustible material to the combustible material beneath it. The k value of a material must be equal or smaller then the required k value to be acceptable.

$$\frac{\text{(BTU) (inch)}}{\text{(foot}^2\text{ (hour) (}^\circ\text{F)}}$$

Thermal Resistance: R value

The R value is a measure of a material's resisteance to heat transfer. R value is convenient when more than one material is used since you can add the R values together, whereas you can not do this for k value. The HIGHER the R factor means less heat is being conducted through the non-combustible material to the combustible material beneath it. The R value of a material must be equal or larger then the required R value to be acceptable.

Converting k to R:

Divide 1 by k and multiply the results times th thickness in inches of the material.

R = 1/k x inches of thickness

Converting R to k:

Divide the inches of thickness by R.

k = inches of thickness/R

Calculatons:

Example: Floor protection requires k value of .84, 3/4 inch thick.

Alternative material has a k value of .6 and is 3/4 inch thick.

Divide .6 by .75 = k value of .80. This k value is smaller than .84 and therefore is acceptable.

8 Venting and Chimney Systems

A. Venting Systems

The venting system consists of:

- A chimney connector (also known as flue or stove pipe)
- A chimney
- Thimble

These get extremely hot during use. Temperatures inside the chimney may exceed 2000°F (1100°C) in the event of a creosote fire.

To protect against the possibility of a house fire:

- Chimney connector and chimney **must be properly installed and maintained.**
- An approved thimble must be used when a connection is made through a combustible wall to a chimney.
- A chimney support package must be used when a connection is made through the ceiling to a factory built chimney.
- An approved thimble and chimney support package are **absolutely necessary** to provide safe clearances to combustible wall and ceiling material.

WARNING! Risk of Fire!

Follow venting manufacturer's clearances and instructions when installing venting system.

A thimble is a manufactured or site-constructed device installed in combustible walls through which the chimney connector passes to the chimney.

- It is intended to keep the walls from igniting.
- Site constructed thimbles must meet NFPA 211 Standards.
- Factory-built must be suitable for use with selected chimney and meet UL103 Type HT Standards.
- Follow instructions provided by the manufacturer for manufactured thimbles for masonry chimney and factory-built chimneys.

WARNING! Risk of Fire!

Follow chimney connector manufacturer's instructions for proper installation.

ONLY use connector:

- *Within the room, between appliance and ceiling or wall.*

Connector shall NOT pass through:

- *Attic or roof space*
- *Closet or similar concealed space*
- *Floor or ceiling*

Maintain minimum clearances to combustibles

NOTICE: Where passage through the wall, or partition of combustible construction is desired in Canada, the installation shall conform to CAN/CSA-B365.

B. Chimney Systems

- The chimney connector joins the stove to the chimney.
- It must be a 6 inch (152mm) minimum diameter 24 gauge mild steel black or 26 gauge blued steel.
- Or an approved air-insulated double wall venting pipe.

Single wall connector or stove pipe

- Must be at least 24 gauge mild steel or 26 gauge blue steel.
- Sections must be attached to the appliance and to each other with the crimped (male) end pointing toward the stove.
- All joints, including the connection at the flue collar, should be secured with 3 sheet metal screws.
- Follow the minimum clearances to combustibles

Factory-built chimney connector (vented)

- A Listed connector (vented) must be used when installing this unit in a mobile home.
- The Listed connectors must conform to each other to ensure a proper fit and seal.

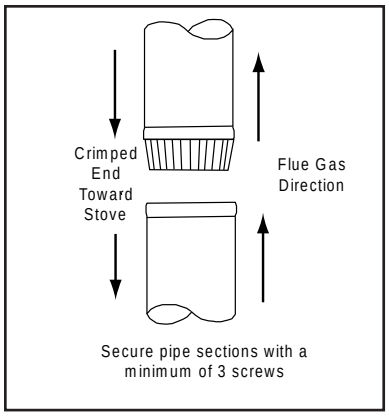

Figure 34.1 Chimney Connector

C. Chimney Height / Rise and Run

- This product was designed for and tested on a 6 inch (152mm) chimney, 14 to 16 feet (427-487cm) high, (includes appliance height) measured from the base of the appliance.
- The further your stack height or diameter varies from this configuration, the possibility of performance problems exists.
- Chimney height may need to be increased by 2 - 3% per each 1000 feet (304.8m) above sea level.
- It is not recommended to use offsets or elbows at altitudes above 4000 feet (1219.2m) above sea level or when there are other factors that affect flue draft.

D. Factory-Built Chimney

The chimney can be new or existing, and must meet the following minimum requirements.

- Must be a 6 inch (152mm) diameter (ID) high temperature chimney listed to UL 103 HT (2100°F) or ULC S629M.
- Must use components required by the manufacturer for installation.
- Must maintain clearances required by the manufacturer for installation.
- Refer to manufacturers instructions for installation.

NOTICE: In Canada when using a factory-built chimney it must be safety listed, **Type UL103 HT (2100°F) [1149°C] CLASS "A"** or conforming to **CAN/ULC-S629M, STANDARD FOR 650°C FACTORY-BUILT CHIMNEYS.**

WARNING! Risk of Fire!

Inspection of Chimney:

- *Chimney must be in good condition and meets the minimum standard of NFPA 211.*
- *Factory-built chimney must be 6 inches (152mm) UL103 HT.*

WARNING! Risk of Asphyxiation!

DO NOT CONNECT THIS APPLIANCE TO A CHIMNEY FLUE SERVICING ANOTHER APPLIANCE OR TO ANY AIR DISTRIBUTION DUCT OR SYSTEM.

This may allow flue gases to enter the house.

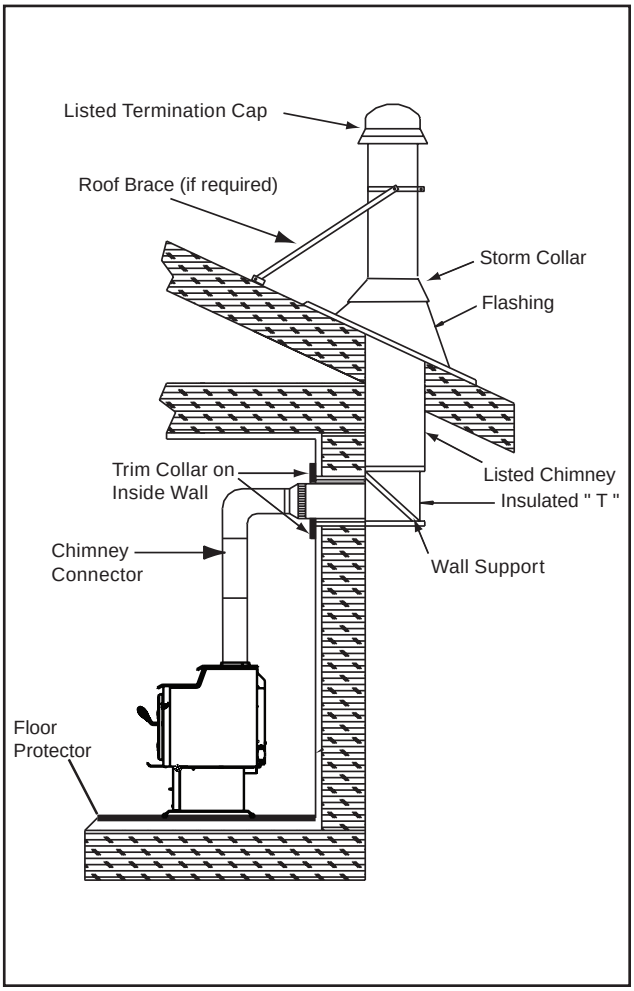

Figure 35.1 - Factory-Built Exterior Chimney

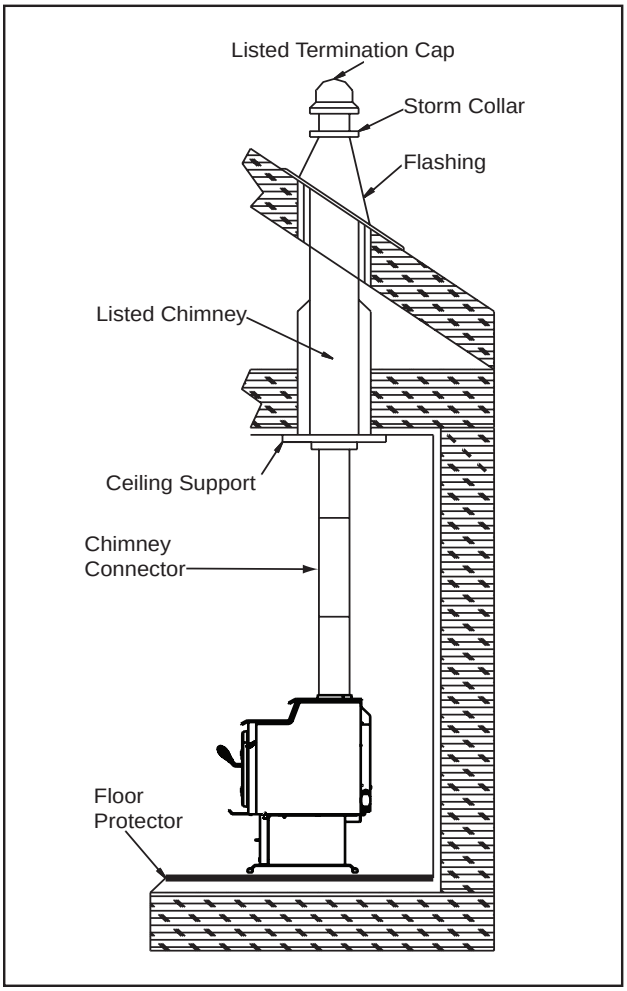

Figure 35.2 - Factory-Built Interior Chimney

E. Masonry Chimney:

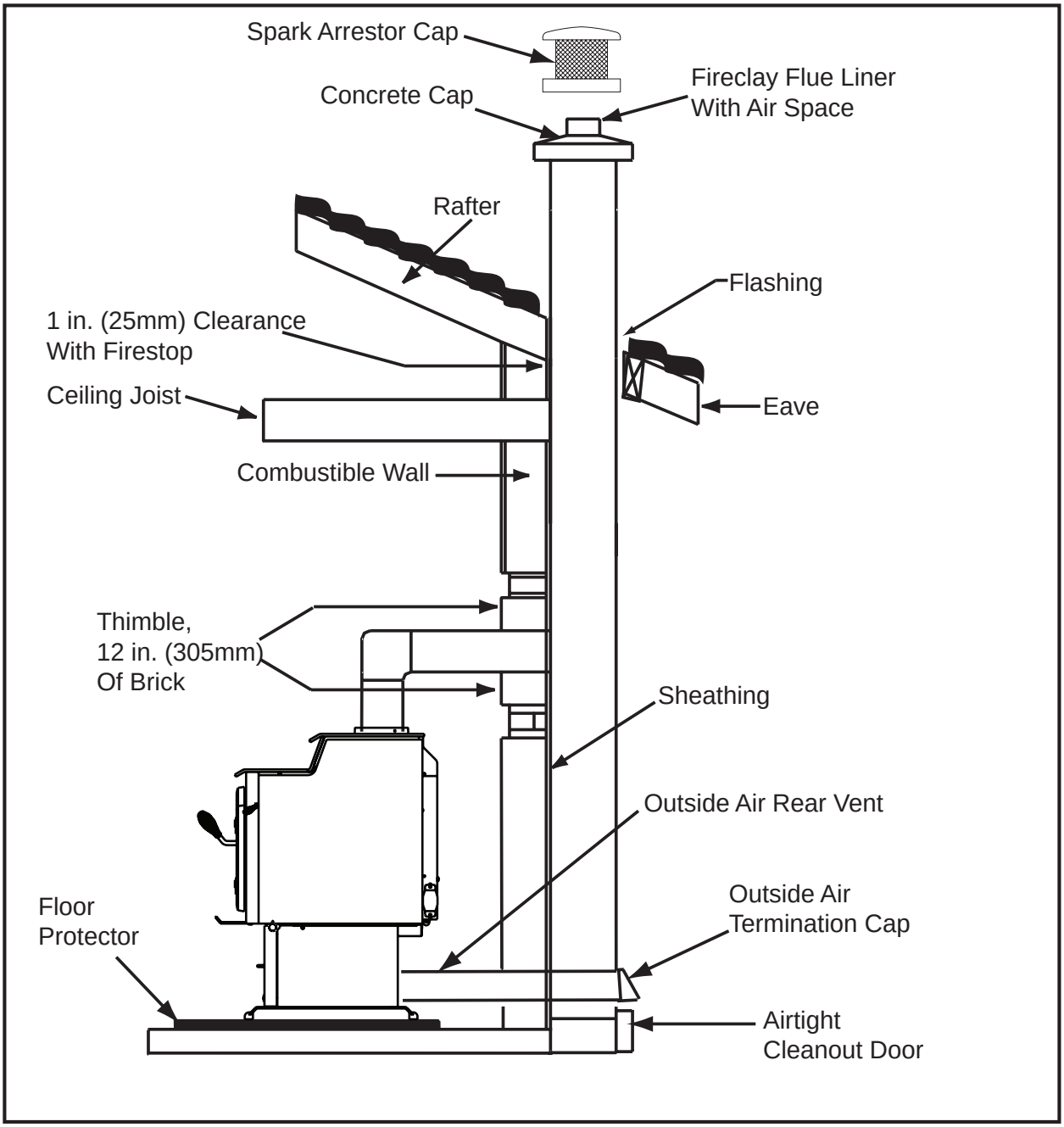

Figure 36.1 Masonry Chimney

WARNING! Risk of Fire!

Inspection of Chimney:

- *Chimney must be in good condition and meets the minimum standard of NFPA 211.*

WARNING! Risk of Asphyxiation!

DO NOT CONNECT THIS APPLIANCE TO A CHIMNEY FLUE SERVICING ANOTHER APPLIANCE OR TO ANY AIR DISTRIBUTION DUCT OR SYSTEM.

This may allow flue gases to enter the house.

F. Masonry Chimney Liner

For optimal performance, masonry chimneys used to vent this appliance should be:

1. Lined with a 6 inch (152mm) stainless steel liner.
   - Installations into a clay flue without a stainless steel liner may reduce draw which affects performance, cause the glass to darken and produce excessive creosote.
2. It is recommended that a chimney with a larger diameter than 6 inches (152mm) be relined.
   - The oversized flue can cause poor performance and contribute to the accumulation of creosote.
3. Have the chimney cleaned before the stove is installed and operated.

The following bullets list the more critical requirements for a properly constructed chimney:

- The masonry wall of the chimney, if brick or modular block, must be a minimum of 4 inches (102mm) nominal thickness.
- A chimney of rubble stone must be at least 12 inches (305mm) thick.
- The chimney must have a fire clay flue liner (or equivalent) with a minimum thickness of 5/8 inch (16mm) and must be installed with refractory mortar.
- An equivalent liner must be a listed chimney liner system or other approved material.
- Since an oversized flue contributes to the accumulation of creosote, the size of the flue should be checked to determine that it is not too large for the insert.
- The chimney should also be checked to ensure it meets the minimum standard of the National Fire Protection Association (NFPA) Standard 211.
- A chimney support package must be used when a connection is made through the ceiling to a factory built chimney.
- An approved thimble and chimney support package are **absolutely necessary** to provide safe clearances to combustible wall and ceiling material.

NOTICE: In Canada, the installation shall conform to CAN/CSA-B365.

NOTICE: Check with your local building authorities and/or consult the National Fire Protection Association (NFPA 211).

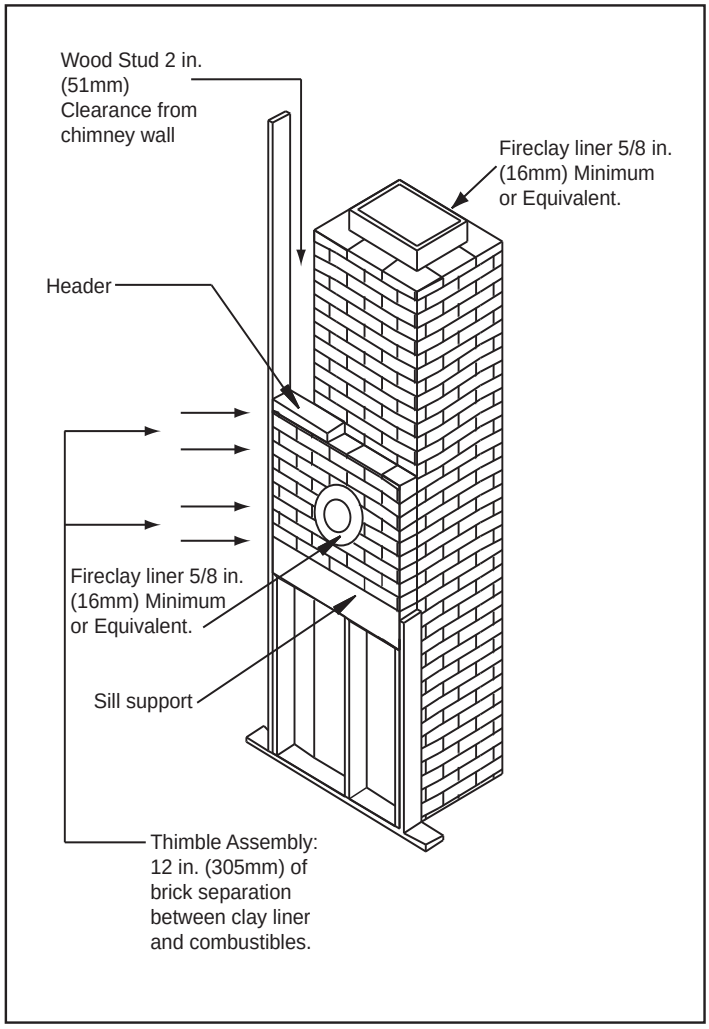

Figure 37.1

G. Air Clearances

- Masonry chimney clearance must meet NFPA 211 minimum requirement of 2 inches (51mm) to sheet metal supports and combustibles.
- Minimum of 1 inch (25mm) clearance around the chimney connector.
- Top of wall opening is a minimum of 13-1/2 inches (343mm) from ceiling or 4-1/2 inches (114mm) below minimum clearance specified by chimney connector manufacturer. NFPA 211 minimum vertical clearance of 18 inches (457mm) from chimney connector and ceiling or minimum recommended by chimney connector manufacturer. **Figure 38.1.**

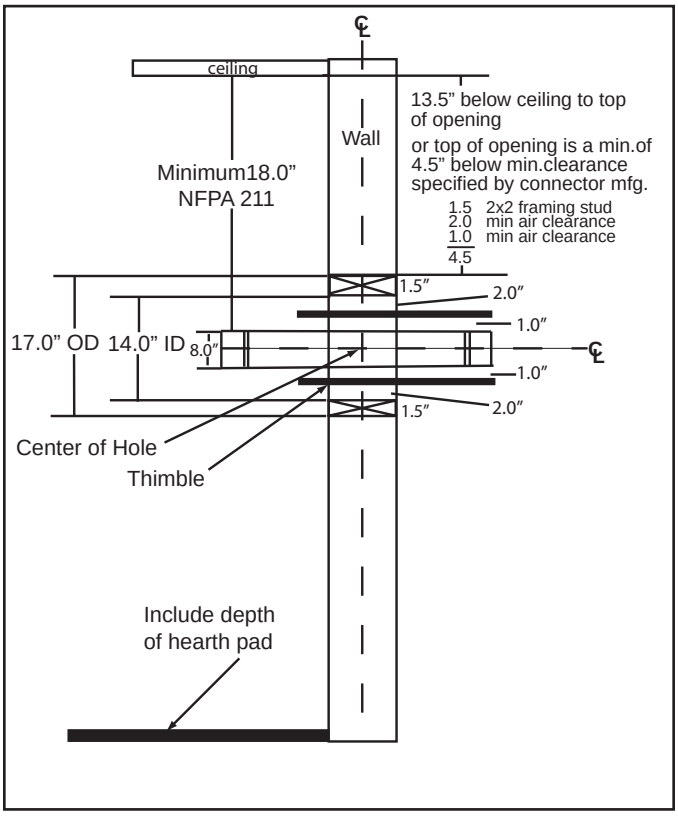

Figure 38.1 - Thimble Construction

H. Thimble

Site constructed for masonry chimney installation:

Components

- A minimum length of 12 inches [305mm] (longer for thicker walls) of solid insulated factory-built chimney length constructed to UL 103 Type HT 6 inch (152mm) inside diameter. Chimney needs to extend a minimum of 2 inches (51mm) from the interior wall and a minimum of 1 inch (25mm) from the exterior wall.
- Wall spacer, trim collar and wall band to fit solid pack chimney selected.
- Minimum 8 inch (203mm) diameter clay liner section (if not already present in chimney) and refractory mortar.

Instructions:

1. Open inside wall at proper height for the chimney connector to enter the masonry chimney. **Figure 38.1.**
2. Entry hole to masonry chimney must be lined with an 8 inch (203mm) minimum diameter clay liner, or equivalent, secured with refractory mortar.
3. Construct a 17 inch x 17 inch (432mm x 432mm) outside dimension frame from 2 x 2 framing lumber to fit into wall opening. Inside opening of frame should be no less than 14 inch x 14 inch (356mm x 356mm). **Figure 38.1.**
4. Attach the wall spacer to the chimney side of the frame.
5. Nail the frame into the wall opening. The spacer should be on the chimney side.
6. Insert the section of the solid insulated chimney into the outer wall of the masonry chimney.
7. Tightly secure the length of the solid insulated chimney with the wall band to the masonry chimney.
8. Insert a section of chimney connector into the chimney. Make sure it does not protrude past the edge of the clay chimney liner inside the chimney.
9. Seal the end of the chimney connector to the clay liner with refractory mortar.
10. Install trim collar around the sold pack chimney section.

Solid Pack Chimney with Metal Supports as a Thimble

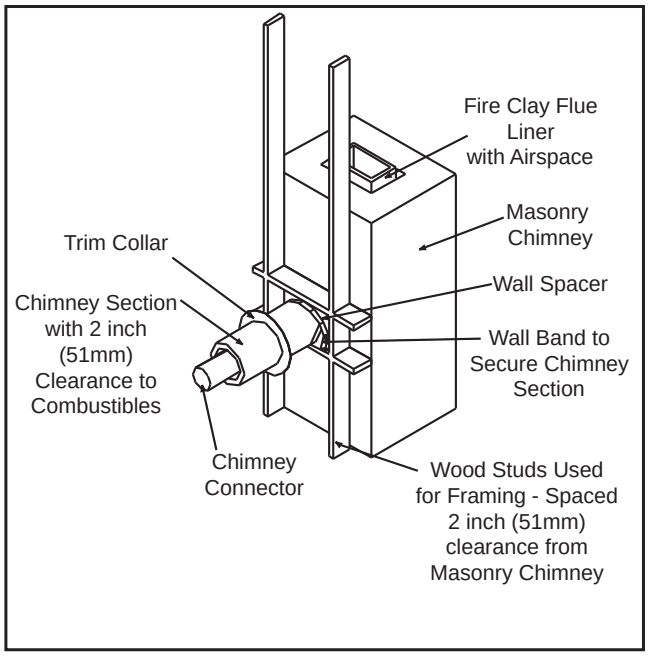

Figure 38.2

Solid Pack Chimney with Metal Supports as a Thimble (Cont'd)

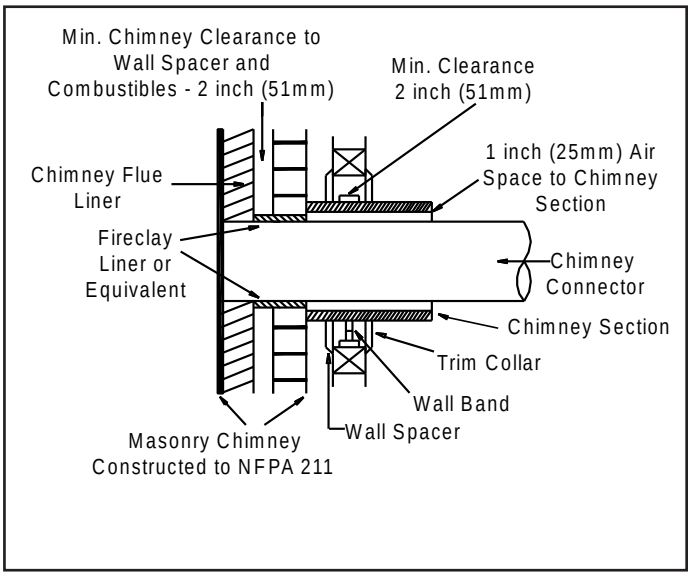

Figure 39.1

WARNING! Risk of Fire!

Do NOT pack insulation or other combustibles between spacers.

- *ALWAYS maintain specified clearanes around venting and spacers and install spacers as specified.*

Failure to keep insulation or other material away from vent pipe may cause a fire.

9 Appliance Set-up

A. Outside Air Kit Installation

A source of air (oxygen) is necessary in order for combustion to take place. Whatever combustion air is consumed by the fire must be replaced.

Air is replaced via air leakage around windows and under doors. In homes that have tightly sealed doors and windows, an outside air source is highly recommended. An optional Outside Air Kit is available.

Included in kit: Termination cap, (2) wire ties, flex adapter, and fasteners

Items Needed for Installation (not supplied)

- 4 inch flex aluminum pipe, or if using alternate material, then it shall be made from durable, non-combustible, heat resistant material up to 350°F (177°C). Cut the pipe to the required length for your installation.
- Phillips head screwdriver
- Silicone sealant
- Drills and saws necessary for cutting holes through the wall or flooring in your home

1. Remove all materials from packing box.
2. Using a #2 Phillips screwdriver attach the flex adapter to the appliance using 4 screws. **Figure 40.1**
3. For floor installation remove circular "knock-out" in the base of the pedestal.
4. **Floor & Rear Installation:** Cut a 4 inch (102mm) hole in outside wall or floor to accommodate outside air piping. Use 4 inch (102mm) aluminum metal flex or rigid piping to directly connect outside air to appliance intake. Use the supplied termination cap with a rodent screen. Seal between the wall (or floor) and the pipe with silicone to prevent moisture penetration.

WARNING! Risk of Fire and Asphyxiation!

Do not draw outside combustion air from:

- *Wall, floor, ceiling cavity or enclosed space such as an attic or garage. Also do not draw outside air from close proximity to exhaust vents or chimneys. Fumes or odor may result if you do.*

Outside air inlet must be located to prevent blockage from leaves, snow, ice or other debrs. Blockage may cause combustion air starvation. Smoke spillage may set off alarms or irritate sensitive individuals.

The length of the outside air supply duct shall NOT exeed the length of the vertical height of the exhaust flue.

- *The fire will not burn properly and their will be smoke spillage when the door is opened due to air starvation.*

5. **Floor Installation Alternative:** In some instances you may not be able to install the flex pipe as show in **Figure 40.1.**

   If that is the case, use the cover plate and sealing rope supplied with the pedestal kit as shown in **Figure 40.2.** The goal is to seal the pedestal so no room air can leak into the pedestal and for cold air infiltration.

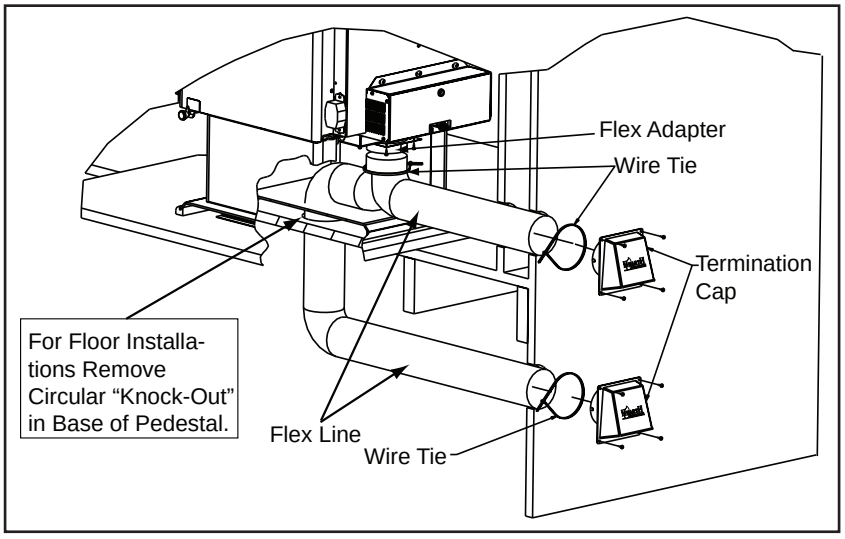

Figure 40.1 - Floor & Rear Installation

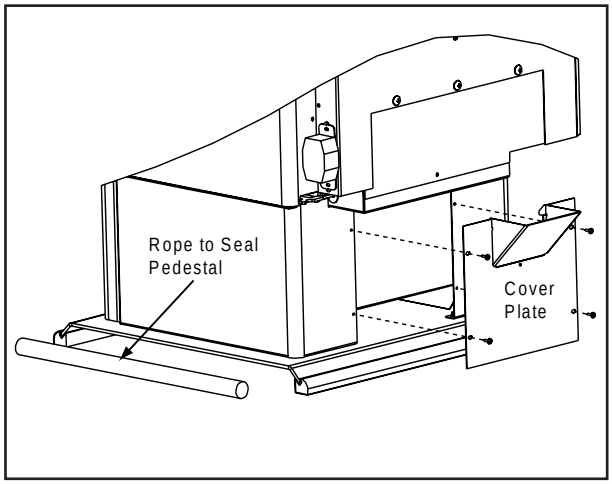

Figure 40.2 - Alternate Floor Installation

B. Pedestal Assembly and Ash Removal System (ARS) Installation

NOTE: The Ash Removal System, must be installed first before installing the pedestal.

Included in Kit: Door assembly, door handle & magnet, ash drawer, fastener package. A cover plate that is required for a floor outside air installation on a pedestal model is also included, if not needed, discard.

Tools Required: Phillips head screwdriver, 7/16 socket wrench, 3/32 and 5/36 Allen wrench.

Begin installing the ARS System.

1. Remove 3 bricks as shown in **Figure 41.1** and remove the ARS access cover with tool supplied in the component pack.
2. Lay body of stove on its back on a protective pad or pallet.
3. Remove the 2 nuts and 2 bolts holding the ash grate channel in place and set the channel aside. Discard the 2 nuts. Install the gasket over the 8 protruding screws. **Figure 41.2.**
4. Install ash door assembly by sliding the rod at an angle into the slot on the left side. Slide the door handle over the rod and then finish pushing the rod through the slot.

   Slide the ash door over the 8 screws protruding from the bottom of the stove. Secure with nuts and washers provided. **Figure 41.2.**
5. Re-install handle using a 3/32 Allen wrench to tighten the set screw in the door handle. The set screw needs to be snug. **Figure 41.3.**
6. Install magnet using a Phillips head screwdriver. This magnet will hold the door handle in an open position which in turn holds the ash door open so ashes can be brushed into the ash drawer. **Figure 41.2.**

WARNING!

Do NOT operate before fully assembling components. Burning your stove without a pedestal or leg kit attached:

- *Will void your warranty.*
- *May result in property damage or personal injury.*

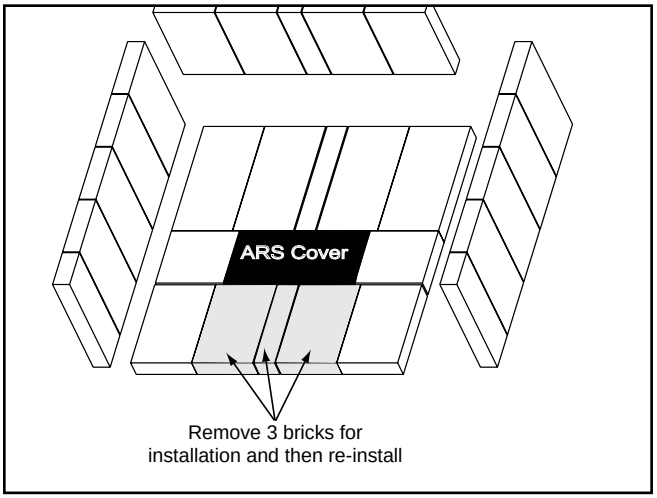

Figure 41.1

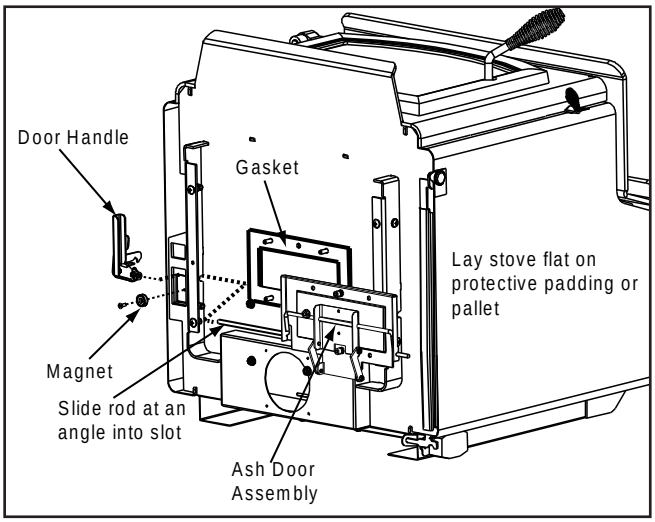

Figure 41.2

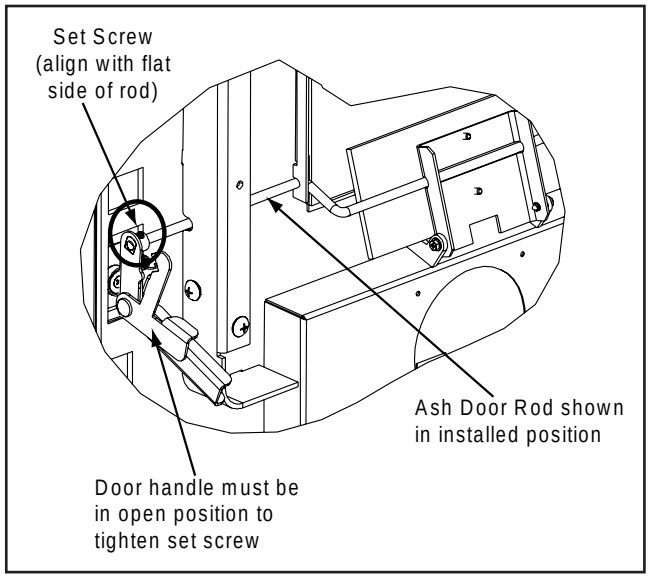

Figure 41.3

Pedestal and Ash Removal System (Cont'd)

Installing Pedestal Assembly

1. Slide pedestal over adapter on bottom of stove and secure with screws supplied with the kit. **Figure 42.1.**
2. Line up holes in sides of pedestal with holes in adapter.
3. Securely tighten pedestal into place.
4. Slip wooden decorative strips onto pedestal edges before lifting up stove.
5. Carefully stand stove up and place in desired location.

Finishing the ARS Installation

1. Re-install the ash grate channel and secure with 2 bolts previously removed. Set the ARS access cover and the 3 front cut bricks in place. **Figure 42.2.**
2. Install the ash drawer.
3. Check to make sure baffle boards and ceramic blanket are in their proper locations. **See page 12.**

NOTE: If installing an outside air kit with a pedestal assembly as a floor installation you must attach the enclosed cover plate to the back of the stove. Other wise you may discard this piece. **Figure 42.3.**

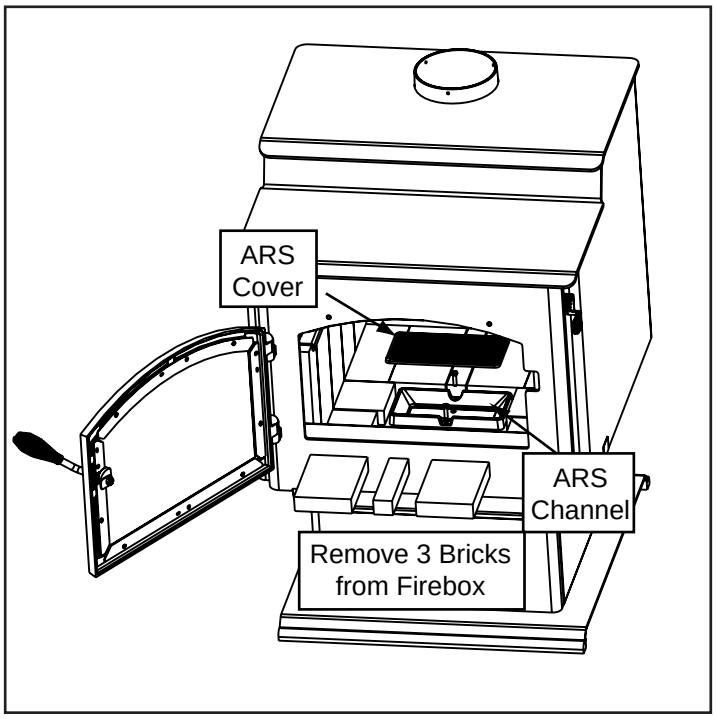

Figure 42.2

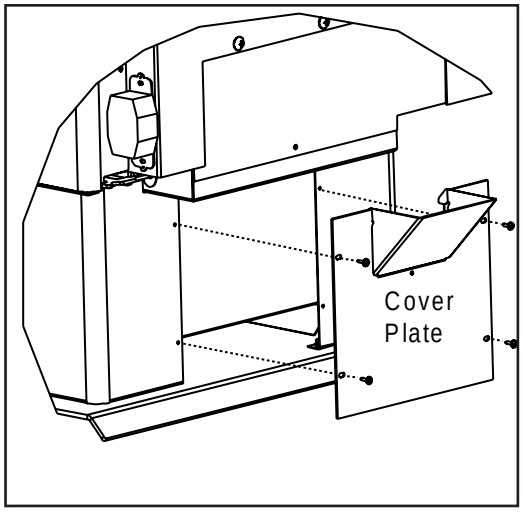

Figure 42.3

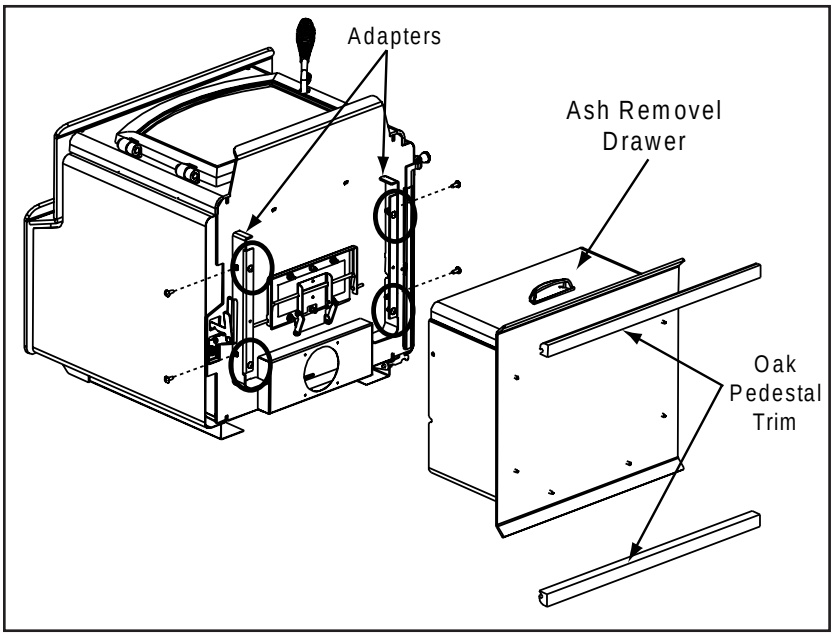

Figure 42.1

C. Leg Kit and Ash Removal System (ARS) Installation

NOTE: The Ash Removal System, must be installed first before installing the legs.

Included in Kit: Door assembly, door handle & magnet, ash drawer, fastener package.

Tools Required: Phillips head screwdriver, 7/16 socket wrench, 3/32 and 5/36 Allen wrench.

Begin installing the ARS System.

1. Follow steps 1 through 6 on **page 41.**

Installing Leg Kit

1. Remove leg mounting brackets packaged inside fire-box.
2. There are 4 screws that are installed on the stove. Remove the screws and use to secure the mounting brackets to the stove at the very top and bottom of the brackets. **Figure 43.1.**
3. There are 6 screws included with the leg kit. Attach 4 of the screws to the bracket at the bottom, leaving the 2 screws loose as identified in **Figure 43.1.**
3. Slide the ash pan assembly bottom slots over the screw heads. This allows the weight of the ash pan to rest on the screws while you are attaching the top 2 screws. Once the ash pan is attached, tighten all screws. **Figure 43.2.**
3. Loosely assemble bolts into the corner of the mounting brackets for leg attachment. **Figure 43.2.**
4. Slide legs onto mounting brackets and tighten. Make sure the legs are up against the bracket. There are leveling bolts in 2 legs. These leveling legs should be in opposite corners. **Figure 43.2.**
5. Carefully lift stove up and place in desired location. Do NOT tilt up on the cast iron legs, it could damage the legs.
6. Use leveling bolts on legs to stabilize and level stove.

Finishing the ARS Installation

1. Follow steps 1 through 3 on **page 42.** See also **Figure 42.2.**

CAUTION!

- *Do NOT tilt the unit on the cast iron legs. Tilting could lead to property damage.*
- *Lift the unit upright and place it into position on the floor protector.*

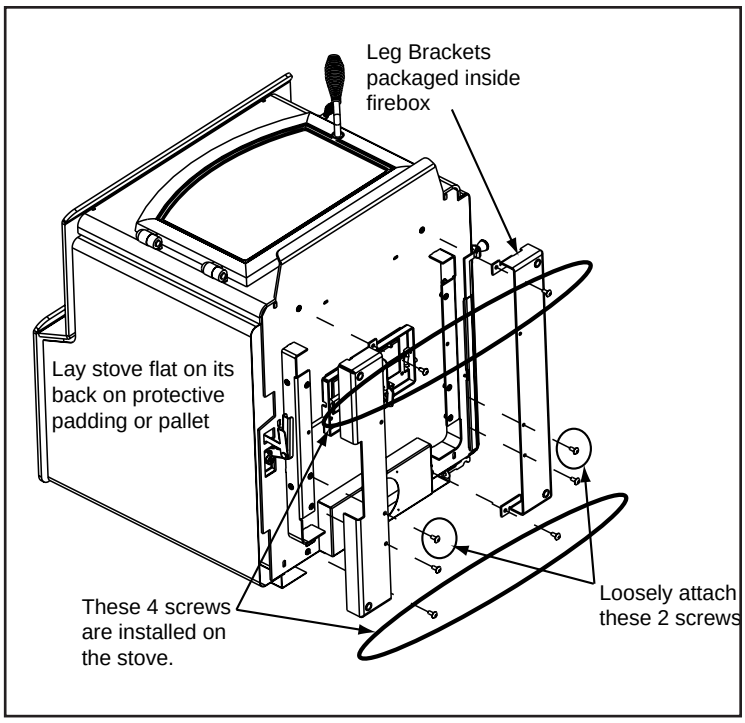

Figure 43.1

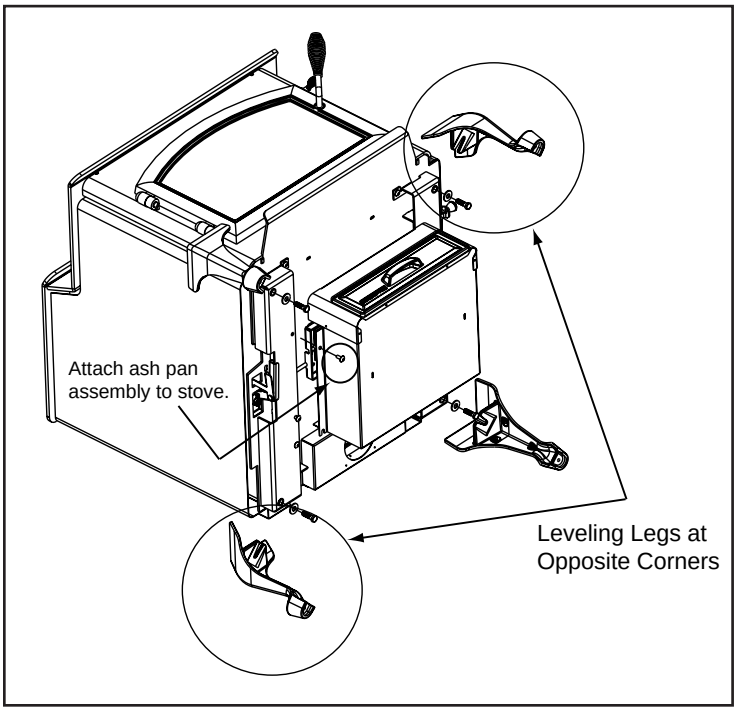

Figure 43.2

D. Mobile Home Installation

You must use a Quadra-Fire Outside Air Kit Part OAK-ACC for installation in a mobile home.

1. An outside air inlet must be provided for combustion See **page 40** for installation information.
2. Appliance must be secured to the mobile home structure by bolting the pedestal through hearth pad and into floor.
3. Appliance must be grounded with #8 solid copper grounding wire or equivalent and terminated at each end with N.E.C. approved grounding device.
4. Appliance must be installed with an approved UL103 HT ventilated chimney connector, UL103 HT chimney, and terminal cap with spark arrestor. Never use a single wall connector (stove pipe) in a mobile home installation. Use only double-wall connector pipe, Dura-Vent DVL, Selkirk metalbestos DS or Security DL double-wall connector or any Listed double-wall connector pipe.
5. In Canada, this appliance must be connected to a 6 inch (152mm) factory-built chimney conforming to CAN/ULC-629M, STANDARD FOR FACTORY BUILT CHIMNEYS.
6. Follow the chimney and chimney connector manufacturer's instructions when installing the flue system for use in a mobile home.
7. Maintain clearance to combustibles.
8. Floor protection requirements must be followed precisely.
9. Use silicone to create an effective vapor barrier at the location where the chimney or other component penetrates to the exterior of the structure.

NOTE:

- Offsets from the vertical, not exceeding 45°, are allowed per Section 905(a) of the Uniform Mechanical Code (UMC).
- Offsets greater than 45° are considered horizontal and are also allowed, providing the horizontal run does not exceed 75% of the vertical height of the vent.
- Construction, clearance and termination must be in compliance with the UMC Table 9C. This installation must also comply with NFPA 211.

NOTE: Top sections of chimney must be removable to allow maximum clearance of 13.5 feet (411cm) from ground level for transportation purposes.

10. Burn wood only. Other types of fuels may generate poisonous gases (e.g., carbon monoxide).
11. If unit burns poorly while an exhaust blower is on in home, (i.e., range hood), increase combustion air.
12. Installation shall be in accordance with the Manufacturers Home & Safety Standard (HUD) CFR 3280, Part 24.

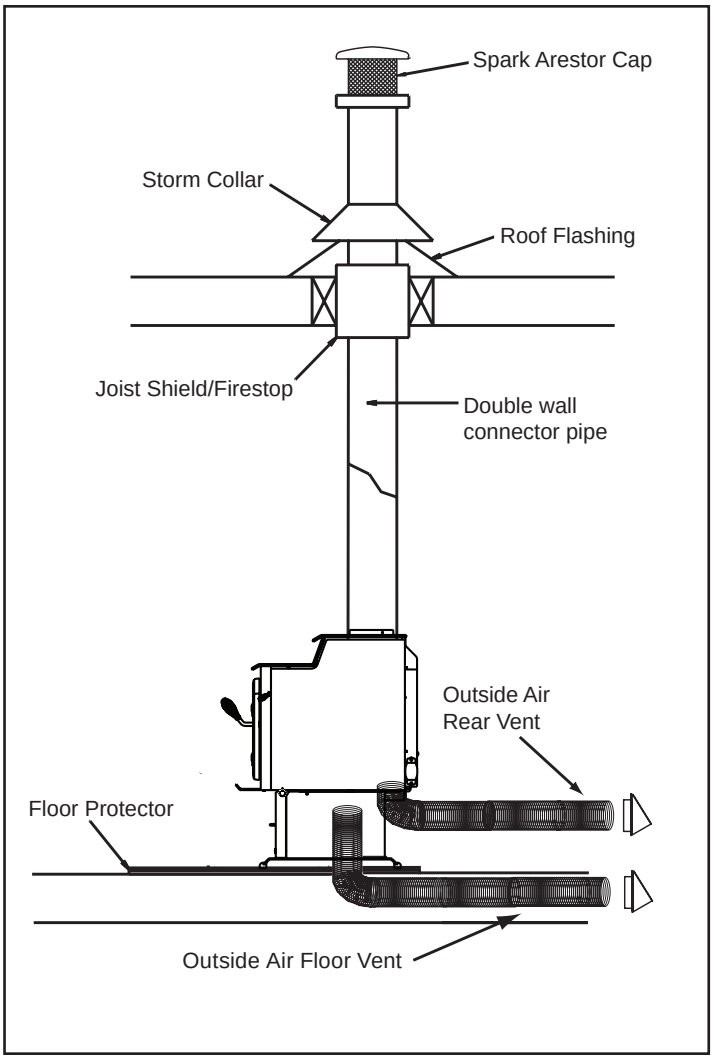

Figure 44.1

CAUTION!

- THE STRUCTURAL INTEGRITY OF THE MOBILE HOME FLOOR, WALL AND CEILING/ROOF MUST BE MAINTAINED

Do NOT cut through:

- *Floor joist, wall, studs or ceiling trusses or any supporting material that would affect the structural integrity.*

WARNING! Risk of Asphyxiation!

NEVER INSTALL IN A SLEEPING ROOM.

It will consume the oxygen in the room.

E. Blower Installation (Optional)

1. Align holes in mounting flange of blower with bolt holes in appliance. Blower should be positioned at bottom of rear outer skin as shown in **Figure 45.1**.
2. Insert and tighten bolts supplied with the kit, securing blower onto outer wall of appliance.
3 Place the bracket containing the snap disc and magnet under the bottom left rear corner as shown in **Figure 45.1**.

   See pages 15 and 21 for detailed operating instructions for the blower and snap disc.

CAUTION! Risk of Shock!

- *Do NOT remove grounding prong from plug.*
- *Plug directly into properly grounded 3 prong receptacle.*
- *Route cord away from appliance.*
- *Do NOT route cord under or in front of appliance.*

F. Adjusting the Blower Speed Control

The blower speed control for this unit is adjusted at the factory, and normally does not require further adjustment.

NOTE: When the speed control is turned clockwise, it will click on to high speed. Continue to turn the speed control clockwise to decrease the speed. At full clockwise, the blower should blow gently, but should not stop.

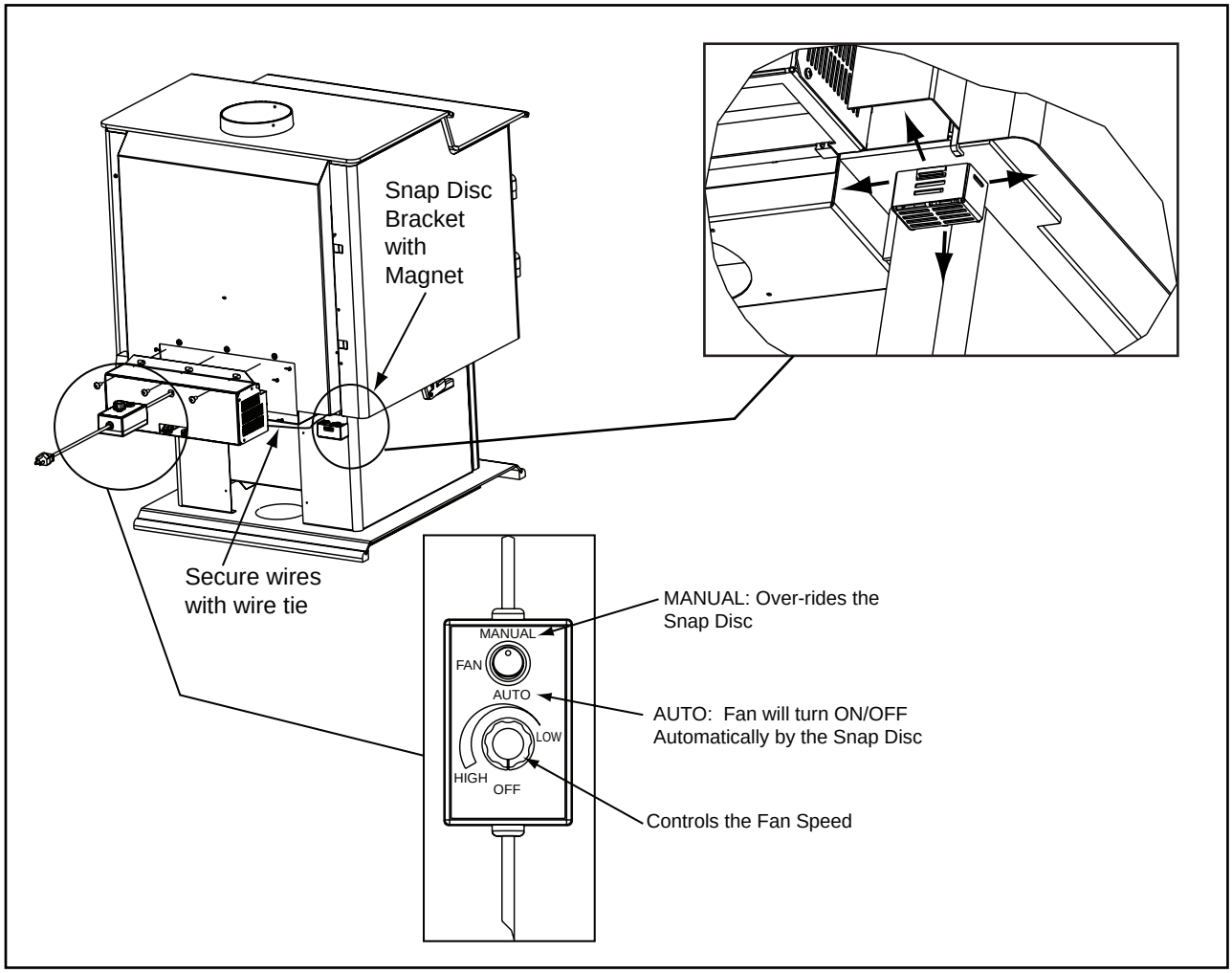

Figure 45.1

10 Reference Materials

Beginning Mfg Date: 4-10-09
Ending Mfg Date:

A. Exploded View

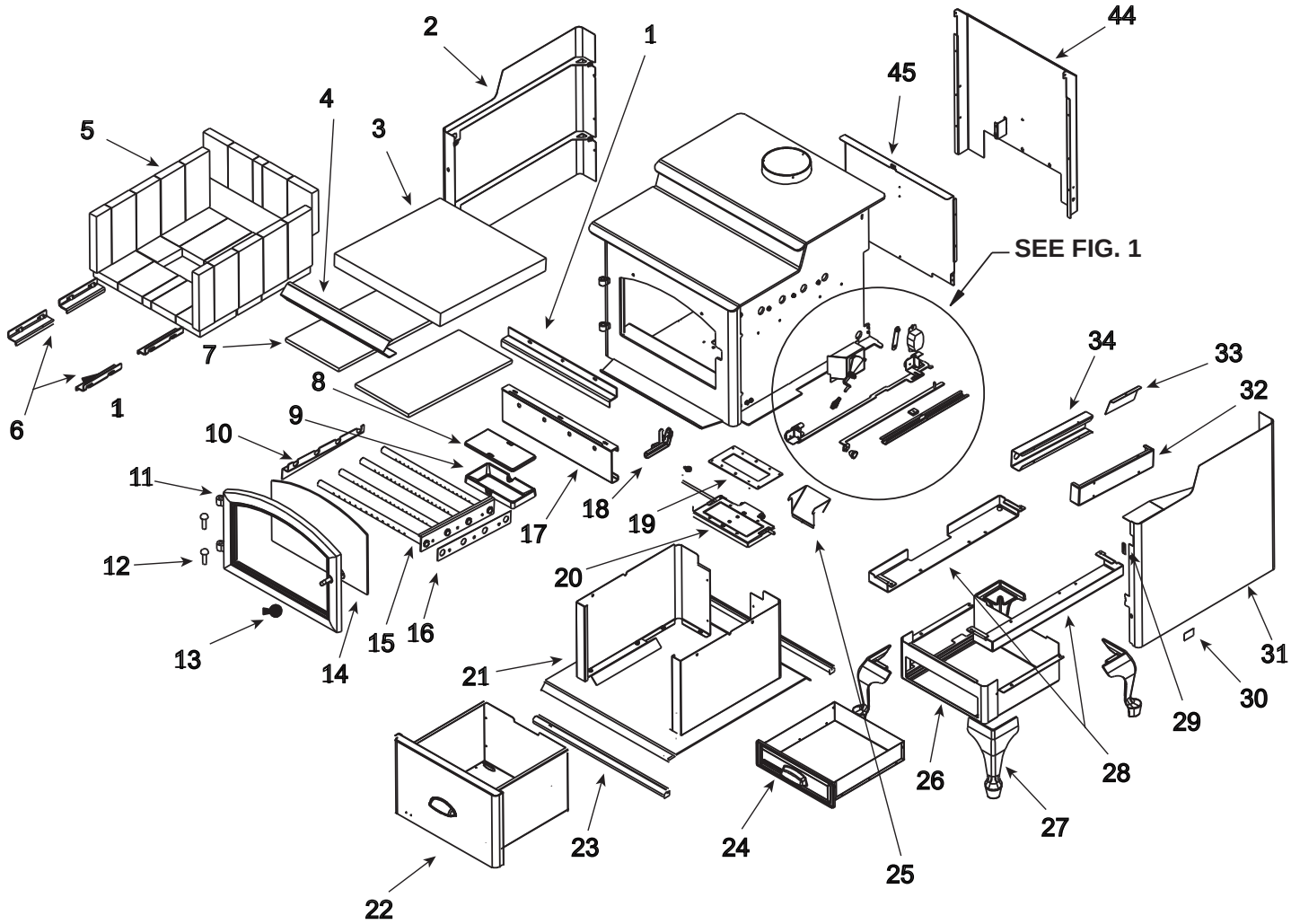

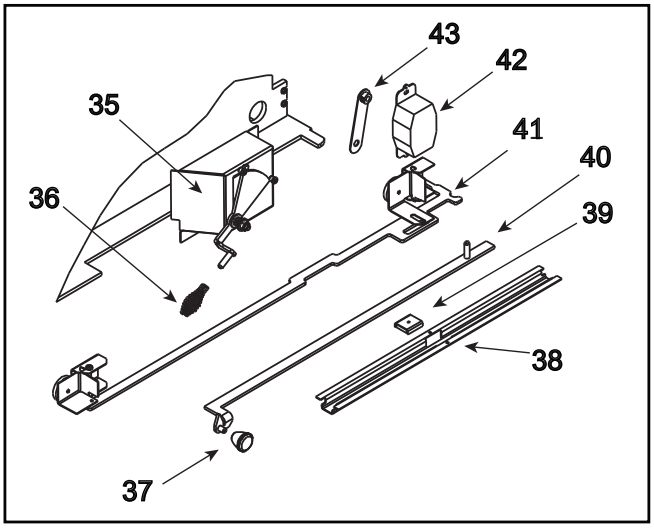

Part number list on following page.

FIGURE 1.

7025-011B 6-1-09

B. Service Parts & Accessories

IMPORTANT: THIS IS DATED INFORMATION

When requesting service or replacement parts for your appliance please provide model number and serial number. All parts listed may be orderd from an authorized dealer.

HOW TO ORDER

To order the entire assembly, order the top line part number only. To order an individual part from an assembly, order the part(s) listed in the indented portion.

Item	Description	Comments	Part Number	Stocked at Depot
1	Brick Retainer, Rear		SRV7038-148	
2	Panel Assembly Side, Left		SRV7038-006	
3	Blanket, Ceramic Fiber		SRV7038-117	Y
4	Baffle Protection Channel		SRV7038-179	
5	Brick Set		SRV7038-007	
	Brick, Single	Qty: 1	832-0550	Y
	Brick, Uncut, Set Of 6	Qty: 6	832-3040	Y
6	Brick Retainer, Side	Qty: 4	SRV7038-145	
7	Baffle Board	Qty: 2	SRV7038-118	Y
8	Ars Access Cover		SRV7038-196	
9	Channel, Ash Removal		7033-172	
10	Tube Channel Rack		SRV7038-174	
11	Door Assembly	Black	831-1921	
		Gold Trim	831-1931	
		Nickel Trim	DR-57NL	
12	Hinge Pins, 1/2”	Qty: 2 Gold	832-0250	
		Qty: 2 Nickel	430-5320	
13	Spring Handle, 1/2”	Qty: 1 Gold	832-0620	Y
		Qty: 1 Nickel	250-8330	Y
14	Glass Assembly	17.61 W x 11.49 H	7000-014	Y
	Cam Latch		430-1141	
	Component Pack (Includes Nickel Spring Handles (1) 1/2 Inch & (2) 1/4 Inch, (2) Nickel Hinge Pins, Quadra-Fire Logo)	Black & Gold Doors	436-5350	
		Nickel Doors	436-5360	
	Door Handle Only		430-1131	
	Gasket, Glass Tape, 3/4 “	Qty: 5 Ft, Field Cut to Size	832-0460	Y
	Glass Frame Set		GLA-FRM-5700	
	Handle Assembly, 5700/4300		472-5130	
	Key, Cam Latch		430-1151	
	Logo, Quadra-Fire	Gold	200-3180	
		Nickel	200-3240	
	Nut, Locking Door Handle	Qty: 24	226-0100/24	Y
	Rope, Door, 3/4” X 84”	Qty: 7 Ft, Field Cut to Size	832-1680	Y
	Screw, Flat Head Philips 8-32X1/2	Qty: 10	832-0860	
	Washer, Sae, 3/8 (3 Ea)	Qty: 3	832-0990	
15	Tube Channel Assembly		SRV7038-008	Y
16	Secondary Tube Gasket		7038-187	

HOW TO ORDER *To order the entire assembly, order the top line part number only. To order an individual part from an assembly, order the part(s) listed in the indented portion.*

Item	Description	Comments	Part Number	Stocked at Depot
17	Rear Channel Assembly		SRV7038-001	
18	Latch, Handle Assembly, Ash Removal		SRV7033-047	Y
19	Gasket, Ars		SRV7033-296	Y
20	Ars, Door Assembly		SRV7033-015	Y
21	Pedestal Kit		PED-5700	
22	Ash Pan, Pedestal Model W/Door		SRV7038-010	
23	Trim, Oak Strips (2 Ea)	Qty: 2	SRV472-0520	
	Component Pack, Pedestal, Step-Top (Includes Gasket For Ash Removal, Magnet & Fasteners)		7033-045	
	Ash Pan Door Handle		7033-274	
24	Ash Pan Leg Ars		7033-050	
25	Oak Cover Plate Kit		SRV7038-024	
26	Ash Pan, Front Assembly Leg		7033-008	
	Component Pack, Leg Step Top (Includes Gasket For Ash Removal, Magnet & Fasteners)		7033-048	
27	Legs, Queen Anne	Qty: 4	831-1240	
		Qty: 4	LEGS-QANL	
		Qty: 4	831-1250	
28	Leg Adapter Set	Qty: 2, Left & Right	SRV7038-028	
29	Label, Burn Rate		7033-160	
30	Label, Start-Up, Acc		7033-166	
31	Panel Assembly Side, Right		SRV7038-005	
32	Manifold Cover Plate		SRV7038-185	
33	Secondary Air Diverter		SRV7038-186	
34	Manifold Tube Cover		SRV7038-177	
35	Burn Rate Control Assembly		SRV7038-025	
36	Spring Handle, 1/4”	Qty: 2 Gold	832-0630	Y
		Qty: 1 Nickel	250-8340	
37	Knob		7000-343	
38	Air Control Rod Guide		7033-210	
39	Latch, Magnet		229-0631	
40	Control Arm Assembly Rear		SRV7038-004	
41	Timer Door Control Arm Assembly		SRV7038-019	
	Door Gasket		7033-282	Y
42	Timer (Only) Replacement Assembly		SRV480-1940	Y
43	Timer Arm Assembly		7033-034	Y
44	Air Channel, Convection		SRV7038-127	
45	Air Supply Back		SRV7038-119	

HOW TO ORDER

To order the entire assembly, order the top line part number only.
To order an individual part from an assembly, order the part(s) listed in the indented portion.

Item	Description	Comments	Part Number	Stocked at Depot
	Blower, Convection	Blower Only	812-4900	Y
	Component Pack (Includes Touch-Up Paint, Owners Manual, Warranty Card & Access Cover Handle)		SRV7038-017	
	Handle, Access Cover		SRV7038-197	
	Paint Touch-Up		7000-304	
	Trim Ring, Door	Gold Trim	472-0600	
		Nickel Trim	472-0690	
	Tube Channel Access Cover (Top)		SRV7038-131	
	Tube Support Racks, Left/Right		SRV7038-132	
	Upgrade, Door, Nickel		UK-DRNL	
	ACCESSORIES			
	Blower Assembly		BK-ACC	
	Blower Control Box W/Switch		SRV7000-194	Y
	Component Pack		SRV7033-051	
	Magnet Round		SRV7000-140	Y
	Snap Disc Bracket Assembly		7033-036	
	Snap Disc, # 1, Convection Blower		SRV230-0470	Y
	Speed Control Only (Rheostat)		842-0370	Y
	Wire Harness (Blower)		7033-262	
	Door Assembly	Black	831-1921	
		Gold Trim	831-1931	
		Nickel Trim	DR-57NL	
	Leg Kit & Ash Removal System	Black	LEG-3143-BK	
		Gold	LEG-3143-GD	
		Nickel	LEG-3143-NL	
	Legs, Queen Anne	Qty: 4 Black	831-1240	
		Qty: 4 Gold	831-1250	
		Qty: 4 Nickel	LEGS-QANL	
	Outside Air Kit, Floor & Rear		OAK-ACC	
	Outside Air Collar Assembly		7033-039	
	Outside Air Shield		33271	Y
	Pedestal Kit		PED-5700	
	FASTENERS			
	Avk Rivnut Repair Kit	1/4-20 & 3/8-16 Rivnut Tools	RIVNUT-REPAIR	Y
	Nut, Ser Flange Small 1/4-20	Qty: 24	226-0130/24	Y
	Screw, Pan Head Philips 8-32 X 3/8	Qty: 40	225-0500/40	Y
	Screw, Sheet Metal #8 X 1/2 S-Grip	Qty: 40	12460/40	Y
	Washer, 1/4 Sae	Qty: 24	28758/24	Y

C. Service And Maintenance Log

Date of Service	Performed By	Description of Service

C. Service And Maintenance Log (Cont'd)

Date of Service	Performed By	Description of Service

QUADRA-FIRE®

CONTACT INFORMATION:

Hearth & Home Technologies
1445 North Highway
Colville, WA 99114
Division of HNI INDUSTRIES

Please contact your Quadra-Fire dealer with any questions or concerns.
For the number of your nearest Quadra-Fire dealer,
log onto www.quadrafire.com

CAUTION

DO NOT DISCARD THIS MANUAL

- Important operating and maintenance instructions included.
- Read, understand and follow these instructions for safe installation and operation.
- Leave this manual with party responsible for use and operation.

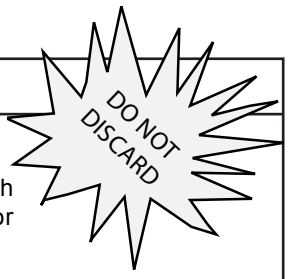

We recommend that you record the following pertinent information for your 5700 Step Top Wood Stove Series (ACC)

Date purchased/installed: _____

Serial Number: _____ Location on appliance: _____

Dealership purchased from: _____ Dealer phone: _____

Notes: _____

_____

_____

This product may be covered by one or more of the following patents: (United States) 4593510, 4686807, 4766876, 4793322, 4811534, 5000162, 5016609, 5076254, 5113843, 5191877, 5218953, 5263471, 5328356, 5341794, 5347983, 5429495, 5452708, 5542407, 5601073, 5613487, 5647340, 5688568, 5762062, 5775408, 5890485, 5931661, 5941237, 5947112, 5996575, 6006743, 6019099, 6048195, 6053165, 6145502, 6170481, 6237588, 6296474, 6374822, 6413079, 6439226, 6484712, 6543698, 6550687, 6601579, 6672860, 6688302B2, 6715724B2, 6729551, 6736133, 6748940, 6748942, 6769426, 6774802, 6796302, 6840261, 6848441, 6863064, 6866205, 6869278, 6875012, 6880275, 6908039, 6919884, D320652, D445174, D462436; (Canada) 1297749, 2195264, 2225408, 2313972; (Australia) 780250, 780403, 1418504 or other U.S. and foreign patents pending.

HEARTH & HOME technologies